TechGroup

Product Group
Gas Sample Probes.

Product Category Gas Sampling.

www.mc-techgroup.com

Electrical heater version HEX 5-2.08

Electrical Heater Type HEX

Version HEX 5-1.08 with temperature controller integrated in the terminal box and version HEX 5-2.08 with temperature controller to be mounted externally

Special Features

- **Suitable for heated M&C components**
- **For gas sample probe type SP3200, mounting is carried out by M&C**
- **For Ex zones 2 and 22/Class I Division 2**
- **Approval according to ATEX, IECEX and CSA**
- **Heating up to max. 230 °C [446 °F]**
- **With high temperature limiter and low temperature alarm**

Application

The M&C electrical heaters type HEX 5 are used in combination with heated M&C components that shall be used in Ex zones 2 or 22 and Class I Division 2, respectively. They have a CSA approval for Class I Division 2, Groups A/B/C/D and ATEX protection classes:

Ex II 3G Ex ec IIC T2 - T5 Gc and
Ex II 3D Ex tc IIIC T75°C - 235°C Dc
(heater only);

Ex II 3G Ex ec nC IIC T2 - T5 Gc and
Ex II 3 D Ex tc IIIC T75°C - 235°C Dc
(temperature controller only);

Ex II 3G Ex ec nC IIC T2 - T5 Gc and
Ex II 3D Ex tc IIIC T75°C - 235°C Dc
(heater with internal temperature controller).

The temperature controller is equipped with a high temperature limiter which switches the heating off automatically in case the temperature setpoint is exceeded by 5 °C [9 °F]. The restart is to be performed by interrupting the distribution voltage or by actuating the exit key.

For monitoring the temperature, the temperature controller is equipped with a low temperature alarm which responds if the temperature underruns the setpoint by 5 °C [9 °F]. This status alarm is available as potential-free contact on the terminal strip.

Description

The electrical heaters type HEX 5 are designed for heating, for example, M&C gas sample probes series SP and filters FT-H. However, they can also be used for heating any other product as far as it is technically possible. The installation on the respective item to be heated is performed by M&C.

The heater consists of an aluminium plate with a heating rod, an electronic temperature controller with limiter and a temperature sensor (PT100).

There are two versions available:

Type HEX 5-1.08: heating unit with temperature controller integrated in the terminal box;

Type HEX 5-2.08: heating unit with terminal box and temperature controller in a wall-mount housing to be installed externally.

The programming of the controller is carried out at works. The following locking will protect the equipment against non-authorized access.

M&C TechGroup Germany GmbH • Rehhecke 79 • 40885 Ratingen • Germany
info@mc-techgroup.com • www.mc-techgroup.com • P. +49 2102 . 935 - 0

Technical Data

Electrical heater	Version HEX 5-1.08, internal controller	Version HEX 5-2.08, external controller
Part No. 230 V/50 Hz Part No. 115 V/60 Hz	20S9650 20S9650a	20S9655 20S9655a
Operating temperature	0 to max. 230 °C [32 to 446 °F] according to temperature class	
Protection	IP65	
Marking for heater		Ex II 3G Ex ec IIC T5-T2 Gc (see temperature class table), Ex II 3D Ex tc IIIC T75°C - 235°C Dc CSA Class I, Div. 2, Groups A/B/C/D, T5 - T2B
Marking for controller		Ex II 3G Ex ec nC IIC T2 - T5 Gc (see temperature class table), Ex II 3D Ex tc IIIC T75°C - 235°C Dc CSA Class I, Div. 2, Groups A/B/C/D, T5 - T2B
Marking for heater with internal controller	Ex II 3G Ex ec nC IIC T5-T2 Gc (see temperature class table), Ex II 3D Ex tc IIIC T75°C - 235°C Dc CSA Class I, Div. 2, Groups A/B/C/D, T5 - T2B	
Certificate No.	ATEX: BVS 09 ATEX E 107 IECEX: BVS 16.0025 CSA: No.1480900	
Ambient temperature	Controller: 0 to +50 °C [32 to 122 °F]	Controller wall-mount housing: 0 to +50 °C [32 to 122 °F] Heater: -20 to +70 °C [-4 to 158 °F]
Temperature status alarm	Triggers when the temperature is 5 °C [9 °F] lower than T_{SET}, normally open contact potential-free with switching capacity 250 V 3 A AC, 0.25 A DC	
Electrical connection	Cable gland, terminal range 6 to 12 mm, terminals max. 4 mm²	
Power supply	240 V 50/60 Hz max. 800 W alternatively 120 V 50/60 Hz max. 830 W	

Temperature Classes (Please indicate required temperature class in your order)

Part number	T-Class ATEX Cenelec/IEC/NEC 505	T-Class CSA NEC 500	Operating Temperature °C [°F]	Limiter °C [°F]
20S9608	T2	T2	230 [446]	235 [455]
20S9609		T2A	215 [419]	220 [428]
20S9610	T3	T2B	185 [365]	190 [374]
20S9611		T2C	175 [347]	180 [356]
20S9612		T2D	160 [320]	165 [329]
20S9613		T3	150 [302]	155 [311]
20S9614		T3A	135 [275]	140 [284]
20S9615	T4	T3C	120 [248]	125 [257]
20S9616		T4	95 [203]	100 [212]
20S9617	T5	T4A	85 [185]	90 [194]
20S9618		T5	70 [158]	75 [167]

The programming and locking of the controller are performed at works in compliance with the indications in your order.

M&C TechGroup Germany GmbH • Rehhecke 79 • 40885 Ratingen • Germany
info@mc-techgroup.com • www.mc-techgroup.com • P. +49 2102 . 935 - 0
Technical specifications and illustrations are without obligation, subject to modifications. 12.22 - 1.00.02

PSP4000-H/C/T

Portable Gas Sample Probe

PSP4000-H/C/T

Special Features

- **Lightweight design, easy to handle and compact construction**
- **Electrically heated – adjustable from 100 to 180 °C [212 to 356 °F]**
- **With integrated microfilter**
- **Variable sample tube and connection technique**
- **Integrated temperature measurement**
- **Gas sampling also with heated sample tube**

Application

Previously, gas sample probes designed for stationary applications had to be used for inspection measurements at different locations. The weight and bulkiness of such units often caused problems for technicians conducting mobile measurements.

Now the light, handy and heated gas sample probe PSP4000-H has been developed as a logical complement to the portable M&C sample gas conditioning systems. Despite its compact design, the unit guarantees a full range of functions. Optionally, the process temperature at the end of the sample tube can be measured by an integrated temperature sensor parallel to the gas sampling. To prevent the temperature from falling below the dew point in the sampling area, a heated sample tube SP34-H (see data sheet "Electrically Heated Sample Probe Tube Series SP®, Version SP34-H for portable gas sample probe PSP4000-H") is available.

With the PSP4000-H/C/T version, temperature measurement during gas sampling is performed by an integrated temperature sensor Fe-CuNi that is adjustable in length.

In combination with the gas sample probe PSP4000-H, a specially assembled heated sample line PSP4M4/6 with replaceable PTFE tube or PSP4M4/6-W with additionally smaller outer diameter is offered. The electrical supply of the probe is then ensured via the power line integrated into the sample line. An aluminium-framed case is optionally available for the safe transport of the probe and the up to 5 m long PSP4M4/6 or the up to 8 m [≈ 26.25 ft] long PSP4M4/6-W heated sample line.

Description

The portable gas sample probe PSP4000-H is electrically heated. Temperature controlling is ensured by an integrated capillary sensor thermostat, adjustable from 100 to 180 °C [212 to 356 °F]. When the operating temperature is reached, an indicator light extinguishes and then flashes during the temperature control cycle. The thermally insulated housing is equipped with a carrying handle and a chain for in-situ attachment. The integrated ultrafine filter element with 2 µm filter porosity reliably retains the contamination of solid particles and is easy to change in just a few simple steps. For heavy-oil furnace measurements, a stainless steel filter wool receptacle FW is optionally available.

The wide and versatile range of sample tubes with diameters from 6 to 12 mm, adapters and thread fittings allows adaptation to the most varied local circumstances.

The version PSP4000-H/C allows calibration gas feeding into the probe without dismounting the probe.

Sampling Options

Sample Tubes incl.
Connector
Length: 1 m *
Material: SS316

Tube 6 x 1 mm
3/8"
40S9020

Tube 8 x 1 mm
40S9030

Tube 10 x 1 mm
40S9040

Tube 12 x 1 mm
Option:
40S9050

1/4"-Sleeve
at End of Tube

R 2"-Thread
Adapter
3/8"
40S9070

3/4"
3/8"

Adapter
3/4"-8 mm
8 ⌀
40S9060

Connector incl.
PTFE-Ferrule
8 mm ⌀
3/8"
40S9005

Flange
DN 65 P N6 *
3/4"
40S9080

Basic Version PSP4000-H

40S1000

Connection
Ø 6*

100-180°C

Cable 4 m *
with Plug

Option: Heated Sample Line
PSP 4M4/6
01B4034(W)/36(W)/37(W)

PSP4000-H/C

40S1005

Calibration Gas
Connection

Ø 6

Swagelok Union
94S0025

Plug
94S0020

O-Ring
94S0030

Adapter for Extensible Probe Length
Tube 8 x 1 mm, Material: SS316

Adapter with
Cone-shaped Part
for Openings
of Ø 10-20 mm

Extendable Probe Tube Length
of 80-200 mm

40S9000

PSP4000-H/C/T

40S1015

Thermocouple
Sensor

Thermo-
couple
Sensor

PTFE-Key Ring
94S0035

* Standard

M&C TechGroup Germany GmbH • Rehhecke 79 • 40885 Ratingen • Germany
info@mc-techgroup.com • www.mc-techgroup.com • P. +49 2102 . 935 - 0

Technical specifications and illustrations are without
obligation, subject to modifications. 07.24 - 1.02.00

Technical Data

Probe Series SP® Portable Version PSP4000	PSP4000-H	PSP4000-H/C	PSP4000-H/C/T
Part No. 230 V Part No. 115 V	40S1000 40S1000a	40S1005 40S1005a	40S1015 40S1015a
Sample temperature	Max. 600 °C [1112 °F] *standard		
Sampling pressure	Max. 1 bar		
Ambient temperature	-20 to +60 °C [-4 to 140 °F]		
Filter chamber volume	40 cm^3		
Filter element	S-2K ceramic, 2 µm		
Probe temperature	Adjustable between 100 to 180 °C [212 to 356 °F], pre-set at works to 180 °C [356 °F]		
Ready for operation	After approximately 30 minutes		
Gas IN	Basic connection G 3/8" i, sample tubes optional		
Gas OUT	1/8" NPT + tube connector 6 mm (8 mm optional) and tube clamp to attach the heated sample line		
Electrical power supply	220-240 V, 50/60 Hz, 200 W or 115 V, 60 Hz		
Electrical connection	Plug and socket connector 7-pole with 4-meter [≈ 13.1 ft] connection cable		
Electrical equipment standard	EN 61010, EN 60519-1		
Type of housing protection	IP40 EN 60529 (starting from Serial No. 1907XXX IP42, EN 60529)		
Material	Stainless steel 316Ti, ceramic, FKM		
Weight	3.5 kg [≈ 2.2 lbs]		
Calibration gas connection for SS tube/plastic tube ø 6 mm	No	Yes	Yes
Temperature measurement with thermocouple sensor FeCuNi, length: 600 mm [≈ 23.6"], with 4 m [≈ 13.1 ft] connection cable and standard plug	No	No	Yes

Dimensions

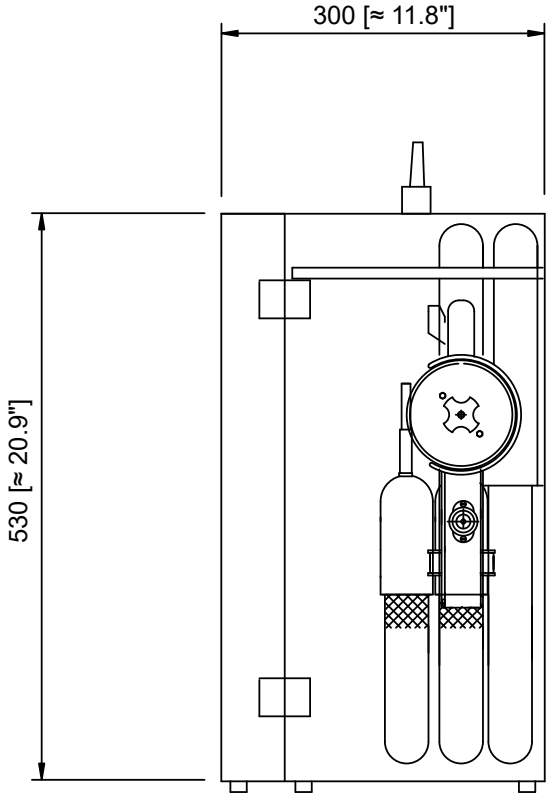

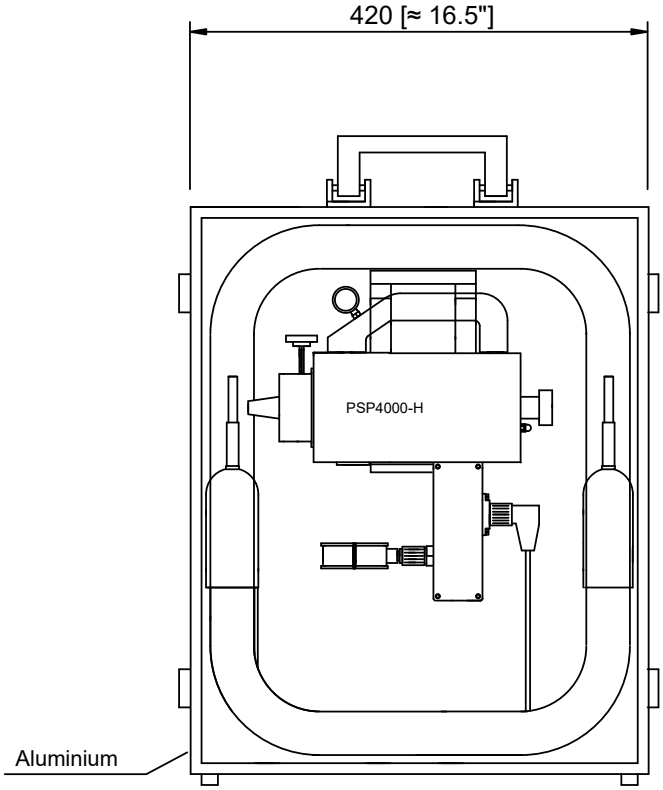

Dimensions in mm [Inches]

Options

Part No.	Miscellaneous
40S9130	Extra charge for PSP4000-H with ø 8 mm tube connector in the sample gas OUT
40S9100	Extra charge for PSP4000-H/FW with stainless steel filter wool receptacle including glass wool filling, filter S-2K not included, connection M 12, material: SS 316Ti
40S9090	Aluminium-framed case for portable gas sample probe PSP4000H and max. 5 m [≈ 16.4 ft] heated sample line PSP4M4/6 or max. 8 m [≈ 26.2 ft] PSP4M4/6-W, dimensions: (H x W x D): 530 x 420 x 300 mm [≈ 20.9“ x 16.5“ x 11.8“]

	Sample tube adapter with adjustable tube length
40S9005	Adapter fitting 3/8" with gasket and 8 mm PTFE sealing ring
40S9000	Adapter with cone transition for openings of ø 10 to 20 mm and ø 8 mm sample tube out of SS 316TI, extendable from 80 to 200 mm. [≈ 3.1" to 7.9"]
40S9010	Sample tube ø 8 mm with position mark, for extendable probe length from 190 to 300 mm [≈ 7.5" to 11.8"]

	Sample tubes with male connector G 3/8", length: 1 m [≈ 3.3 ft]
40S9020	Material: stainless steel SS 316Ti, ø 6 mm OD, max. 600 °C [1112 °F]
40S9030	Material: stainless steel SS 316Ti, ø 8 mm OD, max. 600 °C [1112 F]
40S9040	Material: stainless steel SS 316Ti, ø 10 mm OD, max. 600 °C [1112 F]
40S9050	Material: stainless steel SS 316Ti, ø 12 mm OD, max. 600 °C [1112 F]
40S9108	Material: Titanium, ø 6 mm OD, max. 400 °C [752 °F]
40S9109	Material: Hastelloy®, ø 6/8 mm OD, max. 900 °C [1652 °F]
40S9112	Material: Inconel® 625, ø 12 mm OD, max. 1200 °C [2192 °F]
40S9106	Material: Kanthal®, ø 15 mm OD, max. 1300 °C [2372 °F]
40S9113	Material: Silicon nitride-ceramic, ø 12.5 mm OD, max. 1400 °C [2552 °F]
40S9110	Material: Ceramic, aluminium oxid[1)], ø DN 12/8, max. 1800 °C [3272 °F], for mounting tube adapter PSP4000H/AO, Part No. 40S9111 is necessary
40S9111	Support tube adapter PSP4000H/AO, with 3 O-rings and 1 gasket, material: stainless steel SS 316Ti

	Heated sample tubes
40S9115	Heated sample tube SP34-H with integrated thermostat
40S9120	Heated sample tube SP34-H1.1 with thermocouple sensor FeCuNi
40S9125	Heated sample tube SP34-H2 with PT100 sensor

	Pre-filter
04S5000	Pre-filter SP1/SS3, OD: 30 mm, length: 150 mm [≈ 5.9"], filter porosity: 3 µm, material: SS 316/316Ti, connection 1/4" NPT o
04S5010	Pre-filter SP1/SS20, OD: 30 mm, length: 150 mm [≈ 5.9"], filter porosity: 20 µm, material: SS 316/316Ti, connection 1/4" NPT o
40S9054	Screw-on connector with female thread for sample tube 12 mm for mounting SP1, material: SS 316Ti, max. 600 °C [1112 °F]

	Accessories made of stainless steel for stationary probe installation
40S9060	Intermediate connection adapter G 3/4"o - G 3/8" i, ø 8 mm, for further adaptation possibilities, with gasket 3/4", SS 316Ti
40S9070	Thread nipple R2" with G 3/4" i und G 3/8" i for mounting the probe in R2“ thread adapter, material: SS 316Ti
40S9080	Flange DN 65 PN 6 B with thread connection G 3/4" for mounting the probe to the flange nozzle (other flange sizes on request), SS 316Ti
90S2075	Flange gasket set for DN 65 PN 6 B, consisting of gasket (67) and screw set M 12 x 60, SS 316Ti

1) Please pay attention to the characteristic feature of ceramic in case of high and changing temperatures!

Temperature controller: see data sheets "Electronic Temperature Controller plug-in system, Version TRD-H1, Version TRD-H3", "Electronic Temperature Controller 701" and " Microprocessor-Controlled Temperature Controller Type 70304"; portable gas conditioning system: see data sheets „Portable Gas Conditioning Unit Series PSS®“ for PSS5, PSS5/3, PSS5C, PSS5C/2, PSS5C/3 und PSS-10/1; portable oxygen analyzer: see data sheets "Oxygen Analyzer Series PMA®" for PMA10 and PMA10S.

Hastelloy® is a registered trademark for a nickel-chromium-molybdenum alloy by Haynes International, USA.
Inconel® is a registered trademark for a nickel-based alloy by Special Metals Corporation, USA:
Kanthal® is a registered trademark for an iron-chromium-aluminium alloy by the Sandvik Group, Sweden.

Pre-filter SP1

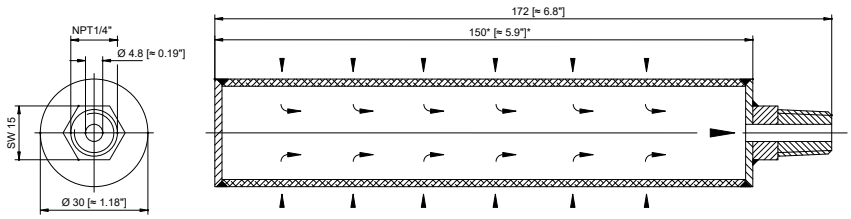

M&C TechGroup Germany GmbH • Rehhecke 79 • 40885 Ratingen • Germany
info@mc-techgroup.com • www.mc-techgroup.com • P. +49 2102 . 935 - 0
Technical specifications and illustrations are without obligation, subject to modifications. 07.24 - 1.02.00

Options (continued)

PSP3/4-M Sil 4/6 with quicklock adapter on one side

Part No.	Heated sample line PSP3/4-M Sil 4/6 with silicone outer jacket and fittings
01B4040	Electrically heated silicone sample line type PSP3-M Sil 4/6 with non-replaceable PTFE hose DN 4/6, 230 V/50 Hz for mobile use, stainless steel tube connection adapted on probe side, max. temperature: 200 °C, price per meter.
01B4045	Front/end fittings type I/K for heated samle line type PSP3-M Sil 4/6, probe-side tube stub 25 mm, connection cable 0.3 m axial to the rear with 7-pole socket, case-side tube stub 25 mm, connection cable 0.5 m axial to rear with 7-pole socket.
01B4050	Electrically heated silicone sample line type PSP4-M Sil 4/6, PTFE tube DN 4/6 replaceable, for mobile use, 230 V/50 Hz, with power line for probe, stainless steel tube stub adapted to the probe, max. temperature: 200 °C, price per meter.
01B4055	Front/end fitting type I/K for heated sample line type PSP4M/Sil4/6, tube stub on the probe side: 0.25 m connection cable axial to the rear, 0.3 mm with 7-pole socket, tube stub on the case side: 0.25 m connection cable axial to the rear, 0.5 mm with 7-pole socket.
01B4070	Option: Quicklock adapter for electrically heated silicone sample line type PSP4M-Sil4/6 with replaceable PTFE hose DN 4/6, 230 V/50 Hz for mobile use, max. temperature: 200 °C, price per piece

	Heated sample line PSP4M4/6, corrugated or nylon braided outer jacket, and fittings
01B4036	Electrically heated sample line PSP4M4/6 with replaceable PTFE tube DN 4/6, 230 V/50 Hz, SS tube stub on the probe side, outer jacket: nylon braided, max. temperature: 200 °C [392°F], price per meter
01B4034	Connection fitting type I for heated sample line PSP4M4/6 with 1.5 m [≈ 4.9 ft] connection cable and 7-pole plug with integrated power supply for PSP 4000
01B4037	End fitting type K for heated sample line PSP4M4/6 with tube stub on the probe side and 0.5 m [≈ 1.6 ft] connection cable axial to the rear, with 7 pole-plug
01B4036W	Electrically heated sample line PSP4M4/6-W with replaceable PTFE tube DN 4/6, 230 V/50 Hz, tube stub out of stainless steel on the probe side, outer jacket: corrugated hose, max. temperature: 200 °C [392°F], price per meter
01B4034W	Connection fitting type I for sample line PSP4M4/6-W with corrugated hose for replaceable PTFE tube DN 4/6, power: 230 V/50 Hz, 110 W/m, and 1.5 m [≈ 4.9 ft] connection cable with 7-pole plug, integrated power supply for PSP4000
01B4037W	End fitting type K for sample line PSP4M4/6-W with corrugated hose for replaceable PTFE tube DN 4/6, tube stub on the probe side, 0.5 m [≈ 1.6 ft] connection cable axial to the rear, with 7-pole plug

SP10-H

Gas Sample Probe Series SP®

Versions SP10 and SP10-H with internal process filter

Special Features

- **Sampling of process gases with high dust levels**
- **Fast response time**
- **Easy installation and maintenance**
- **Electrically heated with integrated thermostat unit**
- **Various materials and lengths for extension tubes, large-surface filters**
- **Special versions possible**

Application

The M&C gas sample probe version SP10 is used for continuous sampling of high dust-loaded gases as well as for high-flow gas sampling. Due to its compact design, it requires only limited space. The probe is to be mounted at a weather-proof location.

Description

The M&C gas sample probe version SP10 consists of a heat-resistant tube adapter with a 1" thread, to which the stainless steel sintered filter element type V10 is screwed on. The sinter filters V10-/0... with 325 cm^2 large filter surface or optionally the sinter filters V10-1/2... with 960 cm^2, on request with internal volume reduction for faster response times, protrude directly into the sampling chamber.

The total probe length can be extended from 270 mm to 2 m with a screw-on extension tube. A V-shaped deflector plate is available to protect the filter against possible abrasion. For sample temperatures up to 900 °C [1652 °F], sintered filters and extension tubes made out of Hastelloy®C are available.

The sample probe SP10-H has an electric high-performance heating rod for heating the flange and the outer probe area to prevent the temperature from falling below the dew point in these areas. The temperature is controlled by a capillary sensor thermostat. For outdoor mounting, the weather protection cover 130 must be installed.

Technical Data

Probe Series SP®	Non-Heated Basic Version SP10	Heated Basic Version SP10-H
Part Number	01S1000	01S2000
Dust content	Max. 10 g/m³* optional >10 g/m³	
Sampling pressure	0.4 to 6 bar abs*	
Ambient temperature	-20 to +60 °C** [-4 to 140 °F]**	
Length of the sample probe	270 mm [≈ 10.6"]*, optional with extension tube up to 2000 mm [≈ 78.7"]	
Sampling temperature	V10 max. 600 °C* [1112°F]*, optional HC max. 900 °C [1652 °F]	
Mounting flange	DN 65 PN 6, Form B, SS 316Ti	
Sample gas outlet connection	1/8" NPT inside, for tube connectors max. ø 10 mm	
Filter element without volume displacer	V10, filter porosity: 2 µm, SS 316 -ø 46 x 225 mm	
Material of sample-contacting parts	SS 316, SS 316Ti, Novapress®*	
Ready for operation	After 1 h	
Heater temperature adjustable	+100 to +200 °C * [212 to 392 °F], optional PT100 with PT100 sensor, without thermostat	
Power supply	230 V/50 Hz, 240 V/60 Hz, 315 W, optional 115 V/60 Hz/300 W	
Electrical connection	Terminals max 4 mm², 1 x PG13.5 cable gland	
Degree of protection/electrical equipment standard	IP54, EN 60529/EN 61010, EN 60519-1	
Weight	4 kg [≈ 2.2 lbs]	

* Standard
** For higher ambient temperatures, use option PT100 (Part No. 20S9025) or thermocouple Fe-CuNi and Ni-CrNi, respectively (Part No. 20S9027 or 20S9028) instead of the thermostat controller. Then, an additional electronic temperature controller (see data sheet "Microprocessor-Controlled Temperature Controller Type 70304") is necessary.
Novapress® is a registered trademark for elastomer-bonded gasket material used by Frenzelit GmbH, Germany.

Available Options:	Type	Part No.
SS316 filter without volume displacer ø 46 x 225 mm, max. 600 °C [1112 °F], up to 10 g/m³ dust content	-V10	Standard
SS316 filter with volume displacer ø 46 x 225 mm, max. 600 °C [1112 °F], up to 10 g/m³ dust content	-V10-0	On request
Hastelloy®C filter without volume displacer ø 46 x 225 mm, max. 900 °C [1652 °F], up to 10 g/m³ dust content	-V10/HC	01S9500
Hastelloy®C filter with volume displacer ø 46 x 225 mm, max. 900 °C [1652 °F], up to 10 g/m³ dust content	-V10-0/HC	01S9520
SS316 filter without volume displacer ø 60 x 550 mm, max. 600 °C [1112 °F], above 10 g/m³ dust content	-V10-2	01S9405
SS316 filter with volume displacer ø 60 x 550 mm, max. 600 °C [1112 °F], above 10 g/m³ dust content	-V10-1	01S9400
Hastelloy®C filter without volume displacer ø 60 x 550 mm, max. 900 °C [1652 °F], above 10 g/m³ dust content	-V10-2/HC	On request
Hastelloy®C filter with volume displacer ø 60 x 550 mm, max. 900 °C [1652 °F], above 10 g/m³ dust content	-V10-1/HC	On request
SS316Ti extension tube without volume displacer, 500 mm [≈19.7"]	-Vo	01S9000
Additional 500 mm [≈19.7"] SS 316Ti extension tube without volume displacer, for an overall length up to 2 m [≈ 78.7"]	-Vo+	01S9005
SS316Ti extension tube with volume displacer, 500 mm	-Vm	01S9010
Additional 500 mm [≈19.7"] SS 316Ti extension tube with volume displacer, for an overall length up to 2 m [≈ 78.7"]	-Vm+	01S9015
Hastelloy®C extension tube without volume displacer, 500 mm [≈19.7"]	-VoHC	01S9510
Additional 500 mm [≈19.7"] Hastelloy®C extension tube without volume displacer, or an overall length up to 1.5 m [≈ 59.1"]	-VoHC+	01S9515
Hastelloy®C extension tube with volume displacer additional 500 mm [≈19.7"]	-VmHC	01S9525
Additional 500 mm [≈19.7"] Hastelloy®C extension tube with volume displacer, for an overall length up to 1.5 m [≈ 59.1"]	-VmHC+	01S9530
Contact hazard and weather protection cover out of stainless steel for probe SP10 with standard flange DN 65	-130	01S9200
Shape protection plate, for filter elements V10 and V10-0, SS 316Ti	-AB-SS	01S9100
Shape protection plate, for filter elements V10-1 and V10-2, SS 316Ti	-AB1-SS	01S9105
Mounting flange in alternative formats: DN... PN... or ANSI... lbs....	-So	On request
Power: 115 V/60 Hz	-115V	02S9035
Low-temperature alarm, from 100 to 180 °C [212 to 356 °F] adjustable	-TA -	On request
High-temperature protection with reset key, setpoint at 220 °C [428 °F]	-TA +	On request
> 5 bar g operating pressure version	-P	On request

Hastelloy® is a registered trademark used by Haynes International, USA.

ΔP at a flow rate of:	100 Nl/h	200 Nl/h	500 Nl/h	1000 Nl/h	2000 Nl/h
ΔP pressure loss with new filter element ø 46 x 225 mm - V10, V10-0, V10/HC, V10-0/HC	< 3 mbar	< 5 mbar	< 20 mbar	< 30 mbar	< 40 mbar
ΔP pressure loss with new filter element ø 60 x 550 mm - V10-1, V10-2, V10-1/HC, V10-2/HC	< 1 mbar	< 1 mbar	< 2 mbar	< 10 mbar	< 20 mbar

Please note: Nl/h and Nl/min refer to the German standard DIN 1343 and are based on these standard conditions: 0 °C [32 °F], 1013 mbar.

Order example:

M&C sample probe SP 10-H with stainless steel large-surface filter incl. internal volume displacer and extension tube incl. internal volume displacer, overall length: 1meter, with high-temperature protection and low-temperature alarm and weather protection shield.

SP 10-H (Part No. 01S2000); V10-1 (Part No. 01S9400); extension tube Vm 500 mm (Part No. 01S9010) for a total probe length of 1 m; TA +; TA -; weather protection cover 130 (Part No. 01S9200).

M&C TechGroup Germany GmbH • Rehhecke 79 • 40885 Ratingen • Germany
info@mc-techgroup.com • www.mc-techgroup.com • P. +49 2102 . 935 - 0
Technical specifications and illustrations are without obligation, subject to modifications. 12.22 - 1.00.01

Dimensions SP 10-H

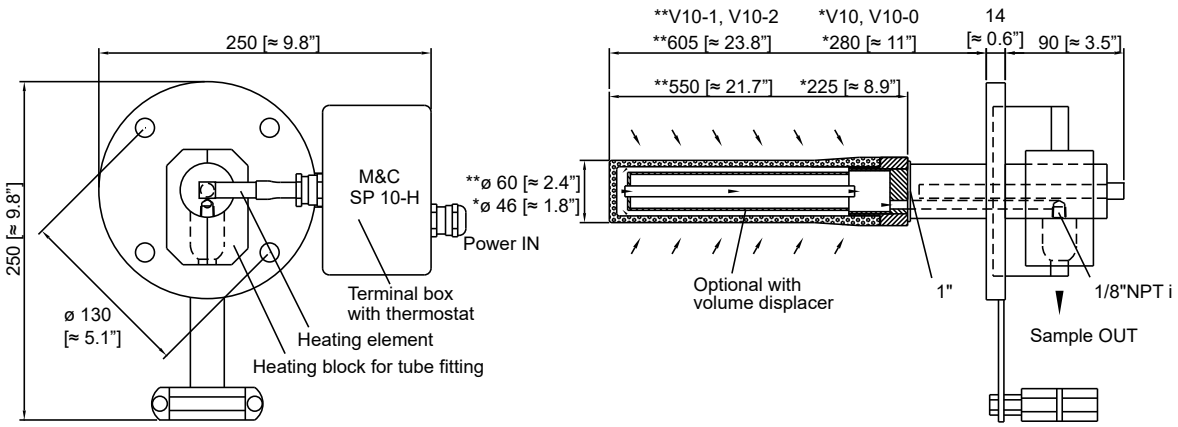

Extension Tube Vo/Vm

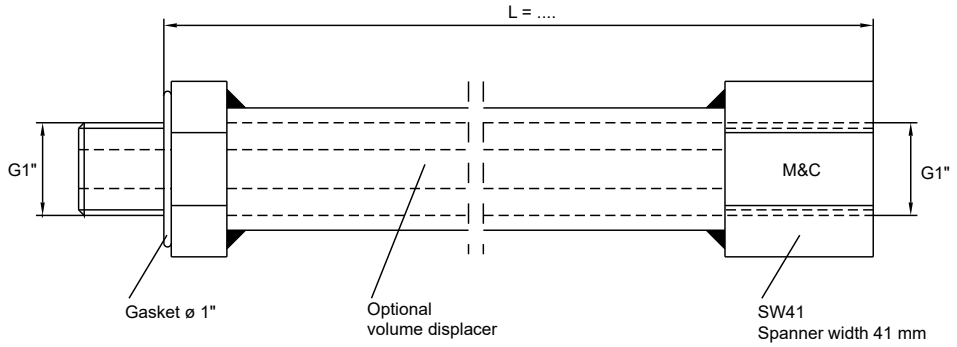

Protective Cover 130

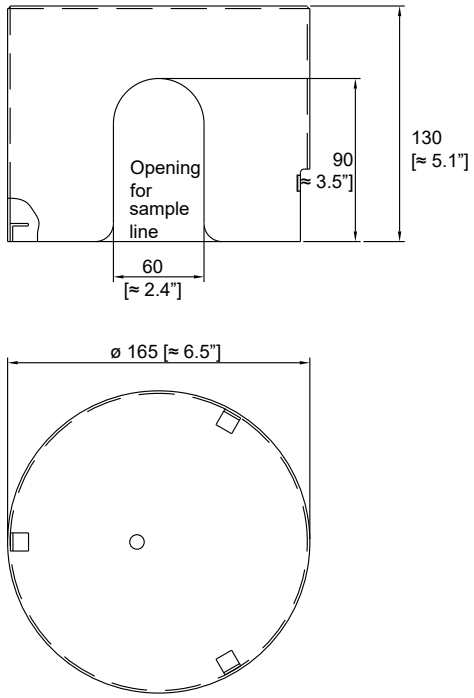

Dimensions in mm [inch]

SP180-H

Gas Sample Probe Series SP®

Electrically heated, compact version with weather protection cover and test gas connection as standard
SP180-H
SP180-H EX2 T2, SP180-H EX2 T3, SP180-H EX2 T4
SP180-H EX1 T2, SP180-H EX1 T3, SP180-H EX1 T4

Special Features

- **3 EX2 versions: T2/T3/T4 with Ex certification according to ATEX, suitable for use in Ex zone 2**
- **3 EX1 versions: T2/T3/T4 with Ex certification according to ATEX, suitable for use in Ex zone 1**
- **IECEX for zone 1**
- **Sampling of dust-loaded process gases**
- **Small volume, fast response time**
- **Self-regulating electrical heating**
- **Alarm contact for low temperature**
- **With test gas connection according to EN 14181 (test gas feeding via filter element)**
- **Easy mounting and maintenance**
- **Sample tube and pre-filter optional**

Application

The M&C gas sample probe versions SP180-H, SP180-H EX1 T2/T3/T4 and SP180-H EX2 T2/T3/T4 are used for continuous gas sampling. The compact design requires only limited space. The gas sample probe is equipped with a new weather protection cover and thus also suitable for outdoor mounting.

Description

The design of the M&C probe versions SP180-H, SP180-H EX1 T2/T3/T4, SP180-H EX2 T2/T3/T4 guarantees simple mounting, reliable operation and trouble-free maintenance.

Changing the external filter element needs no tools and no disassembling of the sample line. To replace the filter element, the complete filter assembly is removed out of the filter chamber. Simple inspection of the sealing elements, easy cleaning of the filter chamber and the possibility of pushing through the sample tube without removing the probe are just a few of the many advantages offered by the M&C probe.

The ceramic deep-acting filter element with a porosity of 2 µm is located in the heated filter housing out of stainless steel. More filter element materials are available as options. The compact design and the new all-round heat insulation and weather protection ensure an optimized heat distribution as well as safe operation in the filter or probe flange area without dew point underrun.

The gas sample probe can be heated up to 180 °C [356 °F] with special self-regulating heating elements within a range from 110 V to 240 V without switching.

Neither a temperature controller nor a temperature limitation is necessary. The separate thermoswitch of the SP180-H enables a low temperature monitoring (< 160 °C [320 °F], NO). For electrical connection, a junction box with terminals is mounted.

The gas sample probes SP180-H, SP180-H EX1 T2/T3/T4 and SP180-H EX2 T2/T3/T4 have a calibration gas connection as standard according to EN 14181 (regulation for calibration of emission monitoring systems) that enables calibration gas feeding via the filter element of the gas sample probe.

The Ex versions SP180-H EX2 T2, SP180-H EX2 T3 and SP180-H EX2 T4 are suitable for usage in Ex zone 2. The alarm contact for low temperature corresponds to the temperature classes of the Ex versions.

The Ex versions SP180-H EX1 T2, SP180-H EX1 T3 and SP180-H EX1 T4 are suitable for usage in Ex zone 1. The alarm contact for low temperature corresponds to the temperature classes of the Ex versions.

The stainless steel sample tube SP210/SS (option) can be screwed into the mounting flange. The maximum operating temperature of the sample tube out of stainless steel is 600 °C [1112 °F].

The gas sample probe SP180-H, which is not ATEX certified, can be used in combination with the heated double-jacket sample tubes SP30-H or SP35-H (see data sheet "Electrically Heated Sample Probe Tube Series SP®, Versions SP30-H, SP30-H1.1-V, SP35-H") for long and cold mounting stubs or for process temperatures below the dew point.

To solve specific sampling problems, you can find more filter elements, sample tubes and pre-filters in our wide range of M&C probe accessories (see data sheets for sample tubes with G 3/4" connection thread and pre-filters with G 3/4" connection, with flange connection and with tube connection).

Technical specifications and illustrations are without obligation, subject to modifications. 06.24 - 1.04.06

M&C TechGroup Germany GmbH • Rehhecke 79 • 40885 Ratingen • Germany
info@mc-techgroup.com • www.mc-techgroup.com • P. +49 2102 . 935 - 0

Technical Data SP180-H, SP180-H EX2

Series SP®	SP180-H	SP180-H EX2 T2	SP180-H EX2 T3	SP180-H EX2 T4
Part No.	02S1800	02S1890	02S1885	02S1880
Protective cover	Yes			
Outdoor mounting	Yes			
Sample temperature	Max. 600 °C [1112 °F]*			
Sample pressure	0.4 to 6 bar abs.			
Ambient temperature	(-40 °C) -25 to +80 °C** [(-40 °F) -13 to +176 °F]**	-20 to +80 °C [-4 to +176 °F]	-20 to +80 °C [-4 to +176 °F]	-20 to +80 °C [-4 to +176 °F]
Dust load	Max. 1 g/m³			
Filter chamber volume	70 ml			
Filter element	Type S-2K, filter porosity 2 µm, ceramic (others on request)			
Probe heating	180 [356 °F] self-regulating	150 to 180 °C [302 to 356 °F] self-regulating	120 to 160 °C [248 to 320 °F] self-regulating	90 to 120 °C [194 to 248 °F] self-regulating
Ready for operation	After 2 hours			
Low temperature alarm contact, alarm point	< 160 °C [320 °F], NO	< 90 °C [194 °F], NO	< 90 °C [194 °F], NO	< 90 °C [194 °F], NO
Low temperature alarm contact, contact rating	250 V - 3 A AC, 30 V - 3 A DC	250 V - 1.5 A AC 0.5 A DC		
Connection sample gas outlet	1/4" NPT inside with Swagelok® tube connector ø 6 x 1 mm (DN 4/6)			
Connection calibration gas	Swagelok® tube connector ø 6 x 1 mm (DN 4/6), connection including sealing plug			
Power supply	110 up to 240 V 50/60 Hz, rated current 3.5 A			
Power consumption	Typically: 100 VA, (fuse 6 A)			
Electrical connection	Terminals max. 2.5 mm², 1 x M20, 1 x M16 cable glands			
Mounting flange	DN 65 PN 6, B stainless steel 316Ti			
Material of sample contacting parts	Stainless steel 316/316Ti, FKM, ceramic			
Degree of protection/Electrical equipment standard	IP54 EN 60529/EN 61010			
Ex Certification	None	Ex II 3G Ex ec mc IIC T2 Gc	Ex II 3G Ex ec mc IIC T3 Gc	Ex II 3G Ex ec mc IIC T4 Gc
Dimensions (W x H x D)	230 x 280 x 225 mm [≈ 9.1" x 11.0" x 8.9"]			
Weight	Approx. 7.5 kg [≈ 16.5 lbs]			
Flow	Max. 500 Nl/h			
Options				
02S9200	Sample tube out of stainless steel 316Ti type SP210/SS, connection G 3/4" o, ø 10/12, length: 1 m [≈ 3.3 ft]*, incl. flange gasket.			

* Standard, other versions on request.
** The safe operation of the heating elements at ambient temperatures of up to -40 °C [-40 °F] needs to be guaranteed. Turning off the heating elements at ambient temperatures below -25 °C [-13 °F] can destroy the sealing materials of the gas sample probe.
Swagelok® is a registered trademark for tube fittings by Swagelok Company, USA.
Please note: Nl/h and Nl/min refer to the German standard DIN 1343 and are based on these standard conditions: 0 °C [32 °F], 1013 mbar.

ΔP and T90 at a flow rate of:	100	200	500	Nl/h
ΔP pressure loss with new filter element S-2K	4	7	15	mbar
T90 time with sample tube SP210/SS	4.0	2.5	< 1.0	sec.

Dimensions

SP180-H and EX versions

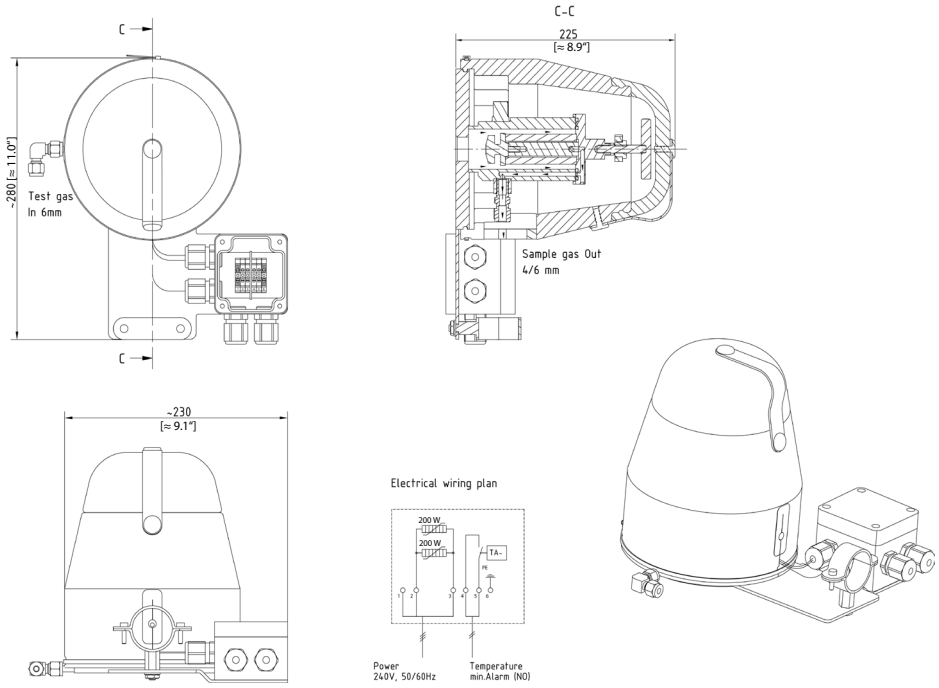

Dimensions in mm
[Inches]

M&C TechGroup Germany GmbH • Rehhecke 79 • 40885 Ratingen • Germany
info@mc-techgroup.com • www.mc-techgroup.com • P. +49 2102 . 935 - 0

Technical specifications and illustrations are without obligation, subject to modifications. 06.24 - 1.04.06

SP180-H EX1

Technical Data SP180-H EX1

Series SP®	SP180-H EX1 T2	SP180-H EX1 T3	SP180-H-EX1 T4
Part No.	02S1874	02S1872	02S1870
Protective cover	Yes		
Outdoor mounting	Yes		
Sample temperature	Max. 600 °C [1112 °F]*		
Sample pressure	0.4 to 6 bar abs.		
Ambient temperature	-20 to +80 °C [-4 to +176 °F]	-20 to +80 °C [-4 to +176 °F]	-20 to +80 °C [-4 to +176 °F]
Dust load	Max. 1 g/m³		
Filter chamber volume	70 ml		
Filter element	Type S-2K, filter porosity: 2 µm, ceramic (others on request)		
Probe heating	+150 to +180 °C [+302 to +356 °F] self-regulating	+120 to +160 °C [+248 to +320 °F] self-regulating	+90 to +120 °C [+194 to +248 °F] self-regulating
Ready for operation	After 2 hours		
Low temperature alarm contact, alarm point	< 90 °C [194 °F], NO	< 90 °C [194 °F], NO	< 90 °C [194 °F], NO
Low temperature alarm contact, contact rating	250 V - 1.5 A AC 0.5 A DC		
Connection sample outlet	1/4" NPT inside with Swagelok® tube connector ø 6 x 1 mm (DN 4/6)		
Connection calibration gas	Swagelok® tube connector ø 6 x 1 mm (DN 4/6), connection including sealing plug		
Power supply	110 up to 240 V 50 / 60 Hz, rated current 3.5 A		
Power consumption	Typically: 100 VA, (fuse 6 A)		
Electrical connection	Terminals max. 2.5 mm², 1 x M20, 1 x M16 cable glands		
Mounting flange	DN 65 PN 6, B stainless steel 316Ti		
Material of sample contacting parts	Stainless steel 316/316Ti, FKM, ceramic		
Degree of protection/electrical equipment standard	IP54 EN 60529/EN 61010		
Ex Certification	Ex II 2G Ex eb mb IIC T2 Gb	Ex II 2 G Ex eb mb IIC T3 Gb	Ex II 2G Ex eb mb IIC T4 Gb
	EXAM BVS 18 ATEX E 043		
	IECEX BVS 18.0034		
Dimensions (W x H x D)	230 x 280 x 225 mm [≈ 9.1" x 11.0" x 8.9"]		
Weight	Approx. 7.5 kg [≈ 16.5 lbs]		
Flow	Max. 500 Nl/h		
Options			
02S9200	Sample tube out of stainless steel 316Ti type SP210/SS, connection: G 3/4" o, ø 10/12, length: 1 m [≈ 3.3 ft]*, incl. flange gasket		

*Standard, other versions on request.

Swagelok® is a registered trademark for tube fittings by Swagelok Company, USA.
Please note: Nl/h and Nl/min refer to the German standard DIN 1343 and are based on these standard conditions: 0 °C [32 °F], 1013 mbar.

ΔP and T90 at a flow rate of:	100	200	500	Nl/h
ΔP pressure loss with new filter element S-2K	4	7	15	mbar
T90 time with sample tube SP210/SS	4.0	2.5	< 1.0	sec.

M&C TechGroup Germany GmbH • Rehhecke 79 • 40885 Ratingen • Germany
info@mc-techgroup.com • www.mc-techgroup.com • P. +49 2102 . 935 - 0

SP2000-H320/S

Gas Sample Probe Series SP®

Version SP2000-H320/S heated to 320 °C [608 °F] with separator vessel

Special Features

- **Special probe downstream of DENOX (SCR)**
- **Heated to 320 °C [608 °F]**
- **No salt formation in the heated filter part**
- **Condensate vessel in the gas outlet with glass globe filling to enlarge the reaction surface**
- **Optionally, heated condensate vessel**
- **Integrated peristaltic pump**
- **Connection for test gas feeding**
- **Easy maintenance and operation**

Application

M&C has developed a special sampling technique for continuous gas sampling of waste gas in DENOX plants (SCR) where NH_3 is added to the flue gas in order to reduce the NOx content. This new sampling technique has also proved to be suitable for processes with very high pollutant concentrations.

In these applications, the measurement of NOx, SO_2 and O_2 concentrations constitutes a major problem. At temperatures < 300 °C [572 °F], ammonium salts are produced by the chemical reaction of NH_3 and the SO_2/SO_3 present in the flue gas.

This salt formation inevitably results in the blockage of filters and sample lines in a relatively short time.

The special M&C gas sample probe SP2000-H320/S represents a good solution for these problems. In order to avoid the risk of blockage due to salification, the sample gas is filtered above 300 °C [572 °F].

Description

The M&C gas sample probe SP2000-H320/S is based on the standard sample probe.

The gas sample probe SP2000-H320/S is temperature-controlled via an integrated capillary sensor thermostat adjustable from 50 to 320 °C [122 to 608 °F] and including a high temperature limiter and low temperature alarm.

As an option, the gas sample probe is available with a FeCu-Ni thermocouple instead of the thermostat controller. For this version, an external temperature controller is necessary.

Due to the modular design and depending on the application, optional sample tubes or pre-filters of various sizes and designs can be connected upstream of the probe.

At the sample gas outlet of the probe, the gas passes via a heated adapter to a non-heated condensate vessel made of glass. It is filled with glass balls to enlarge the surface for the salification. The salt deposits and can be washed out with the condensate.

The peristaltic pump SR25.1G removes the condensate with the dissolved ammonium salts.

The temperature of the vessel is higher than the ambient temperature due to the hot gas stream and the heated adapter. Therefore, a loss of measured components is negligible because of warm condensate. In case of a DENOX application with a small content of NH_3 (normally only a few ppm), it is possible to analyze SO_2 and NOx without great losses (only some ppm which normally can be neglected). To determine the loss, it is possible to feed test gas via the probe to the analyzer(s). A measuring fault can be detected and calibrated.

Optionally, the vessel can also be heated to avoid chemical reactions of the sample gas components below a defined temperature.

The gas outlet of the separating vessel can be connected with a heated sample line 3/4-M for max. 200 °C [392 °F] operating temperature.

Technical specifications and illustrations are without obligation, subject to modifications. 02.23 - 1.00.02

M&C TechGroup Germany GmbH • Rehhecke 79 • 40885 Ratingen • Germany
info@mc-techgroup.com • www.mc-techgroup.com • P. +49 2102 . 935 - 0

Technical Data

	SP2000-H320/S	
Part No.	20S5000(a)	20S5000(a) + 20S9027
Temperature regulation	Thermostat adjustable 50 to 320 °C [122 to 608 °F], with high-temperature limiter and low-temperature alarm as contact output alarm point ΔT30 °C, contact rating 250 V 3 A~ 0.25 A =	With FeCu-Ni thermocouple, (instead of thermostat) option: external electronic temperature controller necessary e.g. Part No. 01B8350
Probe heating	Max. 320 °C [608 °F]	
Ambient temperature	+5 to +60 °C** [41 to 140 °F**] optionally with polyester protective housing -20 to +60 °C [-4 to 140 °F]	
Volume of filter chamber	120 ml	
Sample pressure	0.4 to 2 bar abs.	
Filter element	Ceramic, type S-2K 150*, filter porosity 2 µm	
Condensate vessel	Glass (optional SS 316Ti, Hastelloy®), volume 0.4 l (0.15 l glass ball filling)	
Adapter flange for condensate vessel	Hastelloy®	
Peristaltic pump	SR25.1G, 230/115 V, 50/60 Hz	
Ready for operation	After 2 h	
Connections sample gas outlet/condensate outlet	Hose fitting DN 4/6	
Connection test gas inlet	Tube connection ø 6 mm with blind plug, option: ø 1/4" (a)	
Power supply	230 V/50 Hz, 800 W, option: 115 V 60 Hz (a)	
Electrical connection	Terminals max 2.5 mm², 2 x PG11 cable glands	
Electrical equipment standard	EN 61010, EN 60519-1	
Degree of protection	IP54, EN 60529	
Mounting flange	DN 65 PN 6, B, stainless steel 316/316Ti, option: 3" ANSI 150 lbs RF (a)	
Connection sample tube	G 3/4" i	
Material of sample-contacting parts	Stainless steel 316Ti, graphite, ceramic, Hastelloy®, glass, FKM, PTFE, PVDF	
Weight	17 kg [≈ 37.5 lbs]	
Options		
Part No. 20S9053	2-way ball valve to shut off the process side /VA320	
Part No. 20S9330	3-way ball valve to shut off the process side /3VA320	
Part No. 20S9044	Test gas inlet via check valve 0.7 bar /R	
Part No. 20S9065 and following	Test gas inlet via check valve 0.7 bar /R	
Part No. 01B8350	Electronic temperature controller in wall-mounting housing	
Part No. on request	Heating of the condensate vessel to max. 180 °C [356 °F]	
Part No. 20S9410	Protective housing made of polyester	

* Standard

** In case of higher ambient temperatures, use option PT100 (Part No. 20S9025) or thermocouple Fe-CuNi and Ni-CrNi, respectively (Part No. 20S9027 or 20S9028) instead of the thermostat controller. Then, an additional electronic temperature controller (see data sheet "Microprocessor-Controlled Temperature Controller Type 70304") is necessary.

Part-No. ....(a) = power 115 V/60 Hz, flange 3"150 lbs, test gas connection ø 1/4".

Hastelloy® is a registered trademark for a nickel-chromium-molybdenum alloy by Haynes International, USA.

For further technical data, please see data sheet SP2000.

Dimensions

Gas Sample Probe SP2000-H320/S

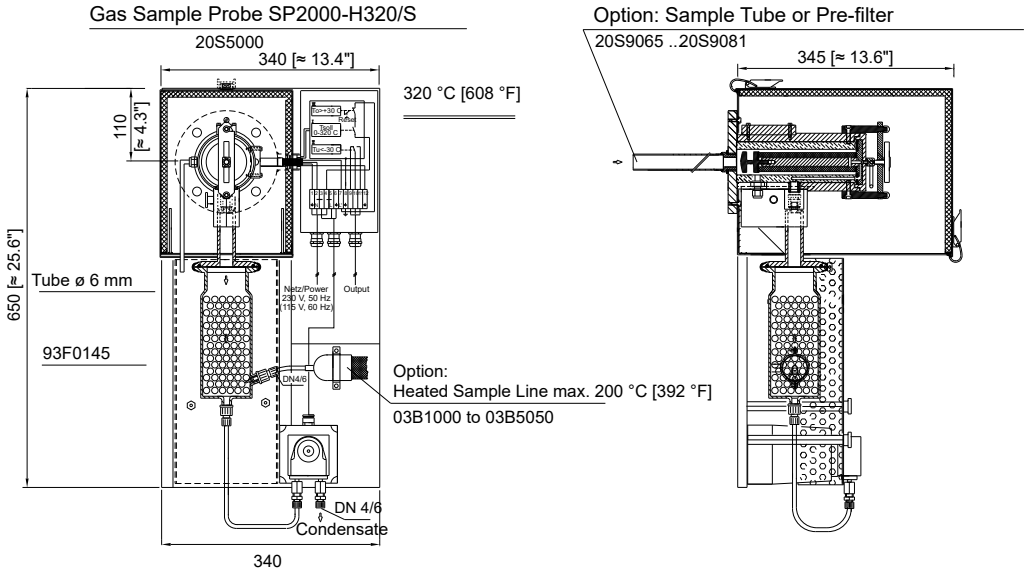

Dimensions in mm [Inches]

M&C TechGroup Germany GmbH • Rehhecke 79 • 40885 Ratingen • Germany
info@mc-techgroup.com • www.mc-techgroup.com • P. +49 2102 . 935 - 0

Technical specifications and illustrations are without obligation, subject to modifications. 02.23 - 1.00.02

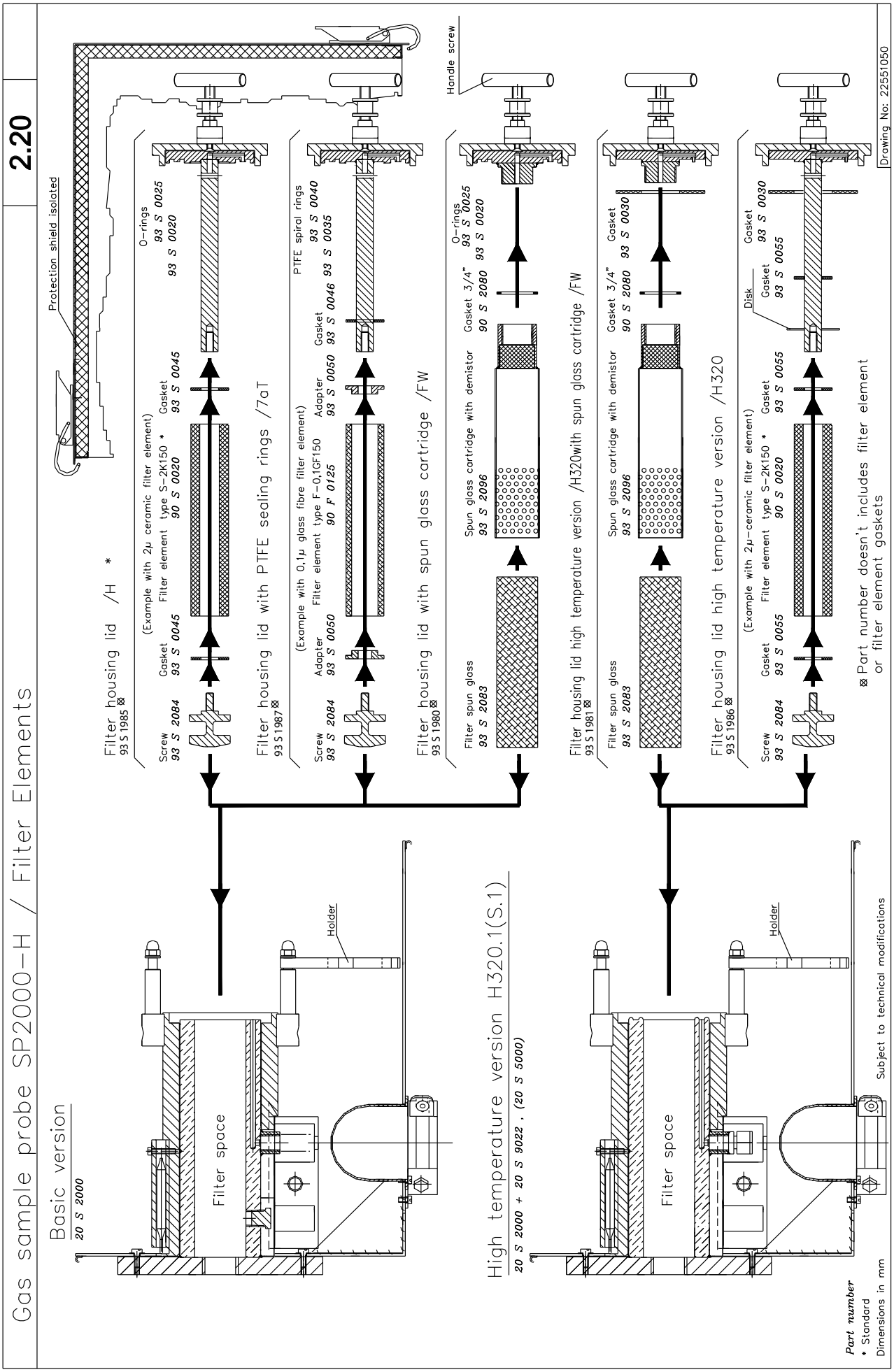
Gas sample probe SP2000-H / Filter Elements
2.20
Protection shield isolated
Handle screw
Filter housing lid /H *
93 S 1985 ⊠
Screw 93 S 2084
Gasket 93 S 0045
(Example with 2µ ceramic filter element)
Filter element type S-2K150 * 90 S 0020
Gasket 93 S 0045
O-rings 93 S 0025 93 S 0020
Filter housing lid with PTFE sealing rings /7aT
93 S 1987 ⊠
Screw 93 S 2084
Adapter 93 S 0050
(Example with 0,1µ glass fibre filter element)
Filter element type F-0,1GF150 90 F 0125
Adapter 93 S 0050
Gasket 93 S 0046
PTFE spiral rings 93 S 0040 93 S 0035
Filter housing lid with spun glass cartridge /FW
93 S 1980 ⊠
Filter spun glass 93 S 2083
Spun glass cartridge with demistor 93 S 2096
Gasket 3/4" 90 S 2080
O-rings 93 S 0025 93 S 0020
Filter housing lid high temperature version /H320with spun glass cartridge /FW
93 S 1981 ⊠
Filter spun glass 93 S 2083
Spun glass cartridge with demistor 93 S 2096
Gasket 3/4" 90 S 2080
Gasket 93 S 0030
Filter housing lid high temperature version /H320
93 S 1986 ⊠
Screw 93 S 2084
Gasket 93 S 0055
(Example with 2µ-ceramic filter element)
Filter element type S-2K150 * 90 S 0020
Gasket 93 S 0055
Disk
Gasket 93 S 0055
Gasket 93 S 0030
⊠ Part number doesn't includes filter element or filter element gaskets
Drawing No: 22551050
Basic version
20 S 2000
Filter space
Holder
High temperature version H320.1(S.1)
20 S 2000 + 20 S 9022 , (20 S 5000)
Filter space
Holder
Subject to technical modifications
Part number
* Standard
Dimensions in mm

Gas sample probe SP2000–H320 / Version 320°C

2.22

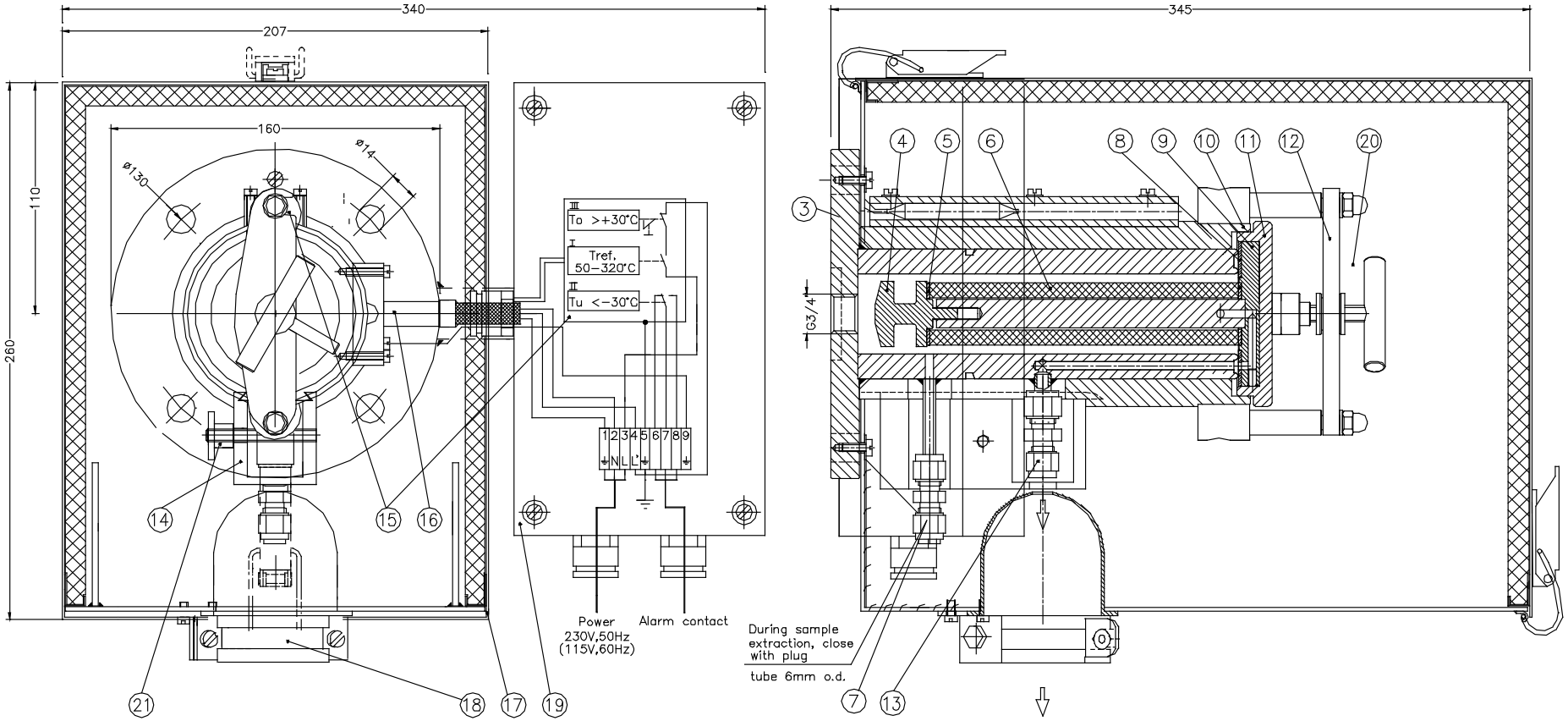

Part number
20S2000 + 20S9021

* Standard

Dimensions in mm

Subject to technical modifications

Item	Description	Type	Part–No	Material
1	–	–	–	–
2	–	–	–	–
3	Flange with G3/4"–thread	DN65/PN6		SS316 *
4	Filter screw M6		*93S2084*	SS316
5	Gasket 30		*93S0055*	graphit
6	Filter element 2 micron	S–2K–150	*90S0020*	Ceramic *
7	Cal. gas connection			SS316

Item	Description	Type	Part–No	Material
8	Gasket		*93S0030*	Graphit *
9	Cover plate with filter holder and filter screw	SP2000./H320	*93S2086*	SS316 *
10	Al–heater body			Anodized Al
11	Al–cover plate			Anodized Al
12	Clamp			SS304
13	Reducing union for pipe 6/8 – 4/6			SS316 *
14	Thermal conductivity jaws			Anodized AL

Item	Description	Type	Part–No	Material
15	Thermostate 50–320°C	EMFf–134	*93S0011*	*
16	Cartridge heater	HLP	*93S0015*	*
17	Weather protection shield		*93S0070*	painted Steel
18	Clamp 1 1/4"		*93S0065*	galvan. Steel
19	Terminal box			painted Al
20	Handle screw M8		*93S0085*	SS304
21	Knurl screw M6		*93S0090*	galvan. Steel

Drawing No: 2255/071

M&C TechGroup Germany GmbH • Rehhecke 79 • 40885 Ratingen • Germany
info@mc-techgroup.com • www.mc-techgroup.com • P. +49 2102. 935 -0

Technical specifications and illustrations are without obligation, subject to modifications. 02.23 - 1.00.02

Gasentnahmesonde/Sample probe SP2000–H.../...VA...

2.25

Version mit 2–Wege–Kugelhahn zum Absperren für Prüfgasaufgabe oder Service
Anwendungsempfehlung: Filterwechsel, Reinigung usw. bei über–/Unterdruck, giftigen, korrosiven Gasen.

Type with 2–way ball valve to shut off for calibration or maintenance.
Recommended application: filter changing, cleaning etc. at over– or underpressure conditions, poisonous or corrosive samples.

Funktion / function	Version / type
2–Wege–Kugelhahn VA zum Absperren der Gasentnahme–sonde vom Prozeß. 2–way ball valve VA for shut off the sample probe from process.	Gasentnahmesonde / Sample probe SP2000–H/VA
2–Wege–Kugelhahn VA zum Absperren der Gasentnahme–sonde vom Prozeß Prüfgasaufgabe über Rück–schlagventil R . 2–way ball valve VA for shut off the sample probe from process. Calibration gas trough checkvalve R .	Gasentnahmesonde / Sample probe SP2000–H/R/VA
2–Wege–Kugelhahn VA mit pneum. Antrieb MS zum aut. Absperren der Gasentnahme–sonde vom Prozeß. 2–way ball valve VA with pneum. actuator MS for aut. shut off the sample probe from process.	Gasentnahmesonde / Sample probe SP2000–H/VA/MS–NC (NO)
2–Wege–Kugelhahn VA mit pneum. Antrieb MS zum aut. Absperren der Gasentnahme–sonde vom Prozeß. Prüfgasaufgabe über Rück–schlagventil R . 2–way ball valve VA with pneum. actuator MS for aut. shut off the sample probe from process. Calibration gas trough checkvalve R .	Gasentnahmesonde / Sample probe SP2000–H/R/VA/MS–NC (NO)

2–Wege–Kugelhahn VA/2–way ball valve VA

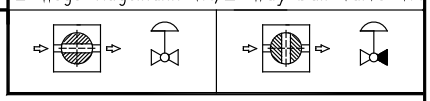

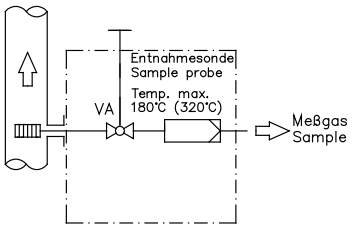

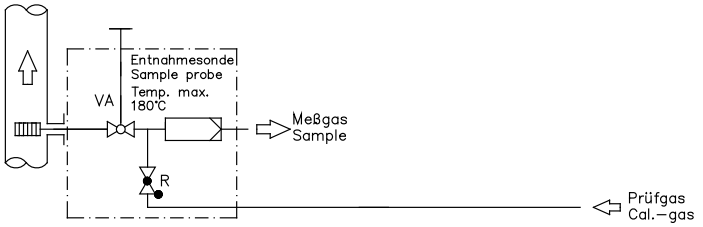

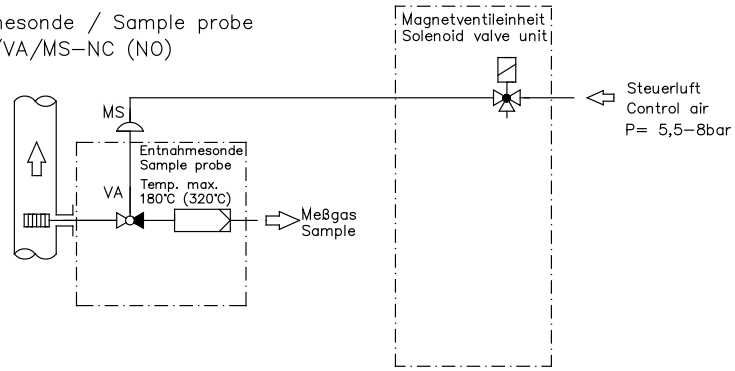

Version 320°C : pneum. Antrieb MS–DA mit 2.Steuermagnetventil (P=>6,5bar) / Type 320°C : pneum. actuator MS–DA with 2. control solonoid valve (P=>6,5bar)

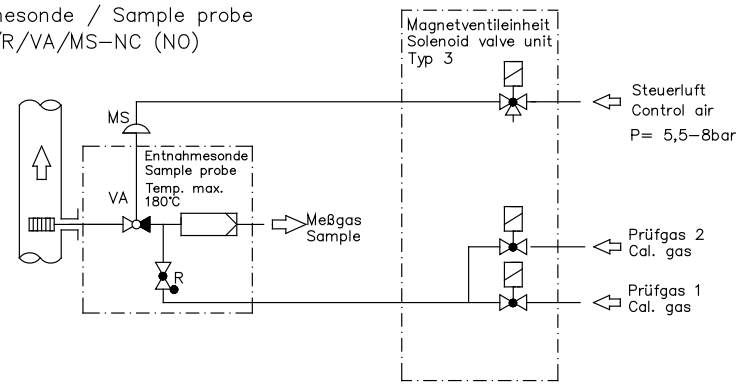

Zeichn.–Nr.: /Drawing No: 22551110

Gasentnahmesonde/Sample probe SP2000–H.../...VA...

2.25

Version mit 3–Wege–Kugelhahn zum Absperren für Rückspülen, Prüfgasaufgabe oder Service
Anwendungsempfehlung: Filterwechsel, Reinigung usw. bei Über–/Unterdruck, giftigen, korrosiven Gasen.

Type with 3–way ball valve to shut off for backflush, calibration or maintenance.
Recommended application: filter changing, cleaning etc. at over– or underpressure conditions, poisonous or corrosive samples.

Funktion / function	Version / type
3–Wege–Kugelhahn 3VA zum Absperren der Gasentnahme–sonde vom Prozeß. Rückspülung und Prüfgas–aufgabe über Kugelhahn 3VA. 3–way ball valve 3VA to shut off the sample probe from process. Backflush and calibration through 3–way ball valve 3VA.	Gasentnahmesonde / Sample probe SP2000–H/3VA
3–Wege–Kugelhahn 3VA mit pneum. Antrieb MS (0–90°) zum autom. (Fernansteuerung) Absperren der Gasentnahme–sonde vom Prozeß. Rückspülung (MS–B) oder Prüfgasaufgabe (MS–C) über Kugelhahn 3VA. 3–way ball valve 3VA with pneum. actuator MS (0–90°) to shut off the sample probe form process automatically Backflush (MS–B) or calibration (MS–C) through 3–way ball valve 3VA.	Gasentnahmesonde / Sample probe SP2000–H/3VA/MS–C (MS–B)
3–Wege–Kugelhahn 3VA mit pneum. Antrieb MS (0–90°) zum autom. (Fernansteuerung) Absperren der Gasentnahme–sonde vom Prozeß. Rück–spülung über Kugelhahn 3VA. Prüfgasaufgabe über Rück–schlagventil R . 3–way ball valve 3VA with pneum. actuator MS (0–90°) to shut off the sample probe form process automatically. Backflush through 3–way ball valve 3VA. Calibration through check valve R .	Gasentnahmesonde / Sample probe SP2000–H/R/3VA/MS–B
3–Wege–Kugelhahn 3VA320 mit pneum. Antrieb 2MS–SO (0–90–180°)zum autom. Absperren der Gasentnahme–sonde vom Prozeß. Rückspülung und Prüfgas–aufgabe über Kugelhahn 3VA. 3–way ball valve 3VA320 with pneum. actuator 2MS–SO (0–90–180°) to shut off the sample probe from process automatically. Backflush and calibration through 3–way ball valve 3VA.	Gasentnahmesonde / Sample probe SP2000–H320/3VA320/2MS–SO

3–Wege–Kugelhahn 3VA/3–way ball valve 3VA

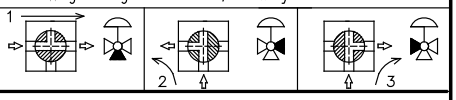

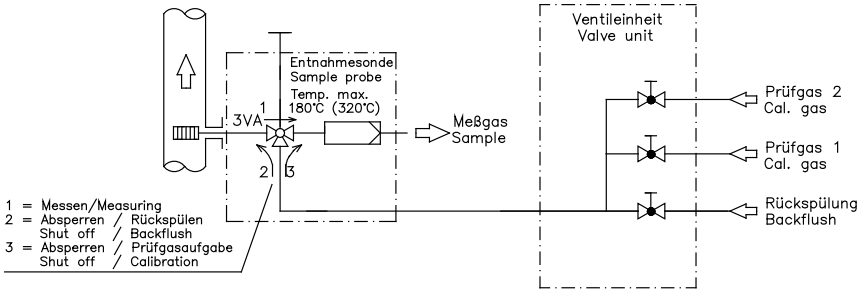

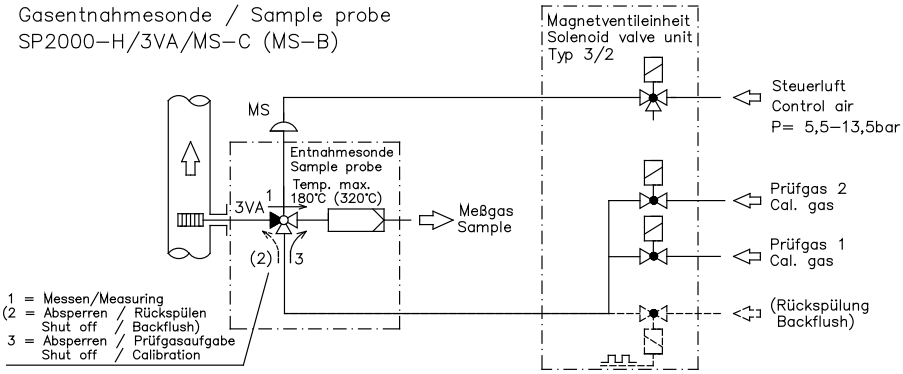

Version 320°C : pneum. Antrieb MS–DA mit 2.Steuermagnetventil (P=>6,5bar)/ Type 320°C : pneum. actuator MS–DA with 2. control solonoid valve (P=>6,5bar)

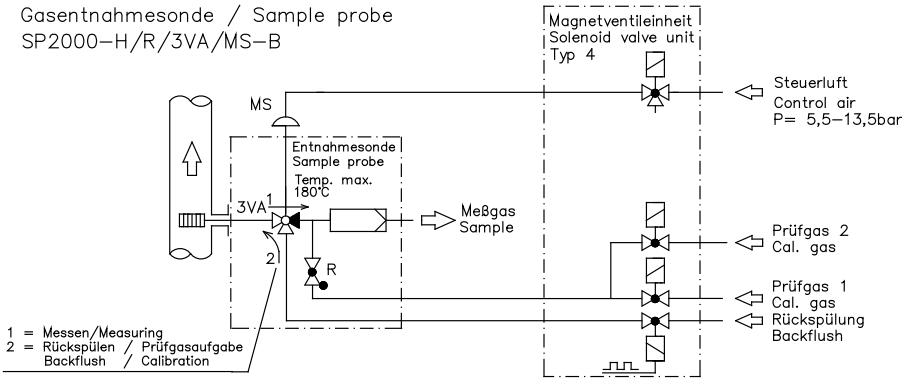

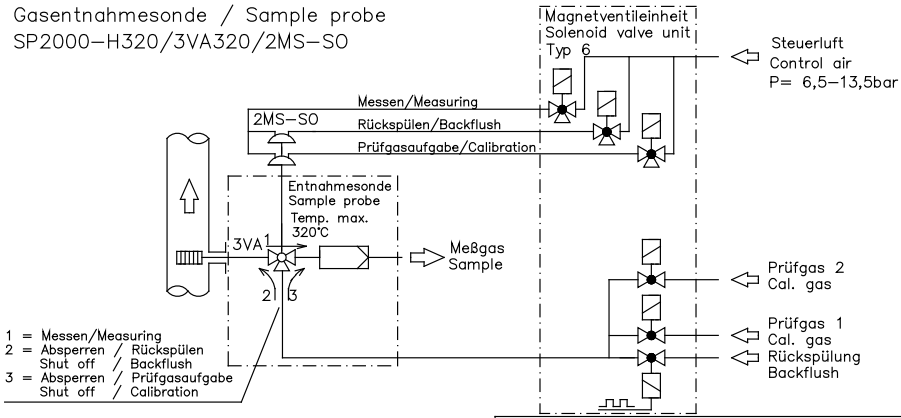

Zeichn.–Nr.: /Drawing No: 22551110/Bl.2

M&C TechGroup Germany GmbH • Rehhecke 79 • 40885 Ratingen • Germany
info@mc-techgroup.com • www.mc-techgroup.com • P. +49 2102 . 935 - 0

Technical specifications and illustrations are without obligation, subject to modifications. 02.23 - 1.00.02

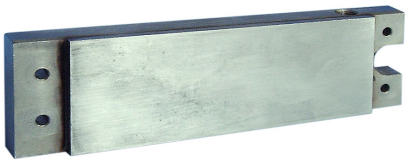

SP2000-H/GVW1

Gas Pre-Heater Series SP®

Version SP2000-H/GVW1(2)

Special Features

- **Prevents temperature drop below the dew point inside the probe**
- **Factory assembly**
- **2 variants with one or two paths**

Application

The M&C GVW1(2) gas pre-heater is used to pre-heat the backpurging or dilution gas of gas sample probes of the SP2000 series in order to prevent possible cooling down inside the gas sample probe. Subsequent problems related to temperatures drops below the dew point resulting in malfunction and corrosion are thus avoided.

Description

The M&C gas pre-heaters GVW1(2) consist of heat exchanger plates made of stainless steel and can be directly mounted to the heating system of the sample probe series SP2000-H.

The pre-heater type GVW2 is especially designed for the dilution probes SP2000-H/DIL. With its two gas paths, dilution gas as well as bypass gas can be pre-heated to achieve faster response times.

The optional backpurging connection to the probe of series SP2000-H is ensured via a 6-mm-tube (standard).

Technical specifications and illustrations are without obligation, subject to modifications. 06.20 - 1.00.00

M&C TechGroup Germany GmbH • Rehhecke 79 • 40885 Ratingen • Germany
info@mc-techgroup.com • www.mc-techgroup.com • P. +49 2102 . 935 - 0

Dimensions

GVW1

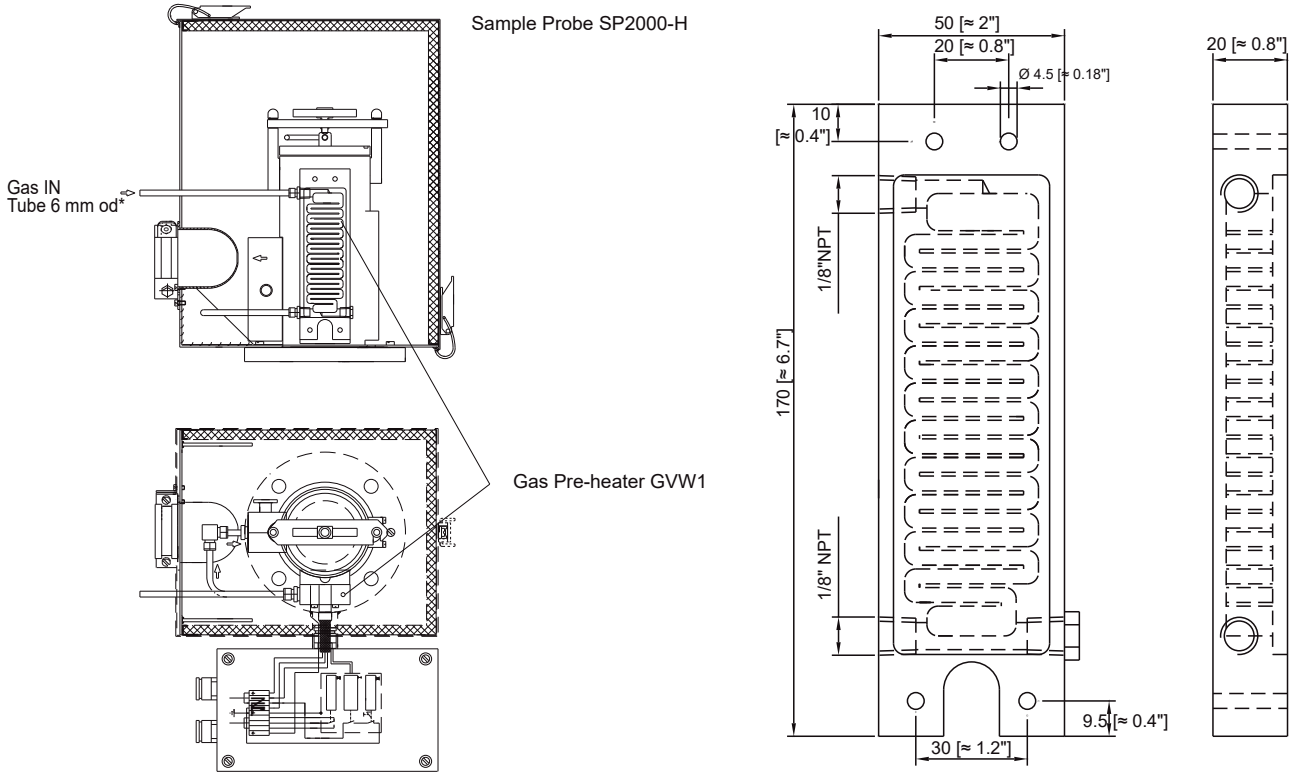

GVW2

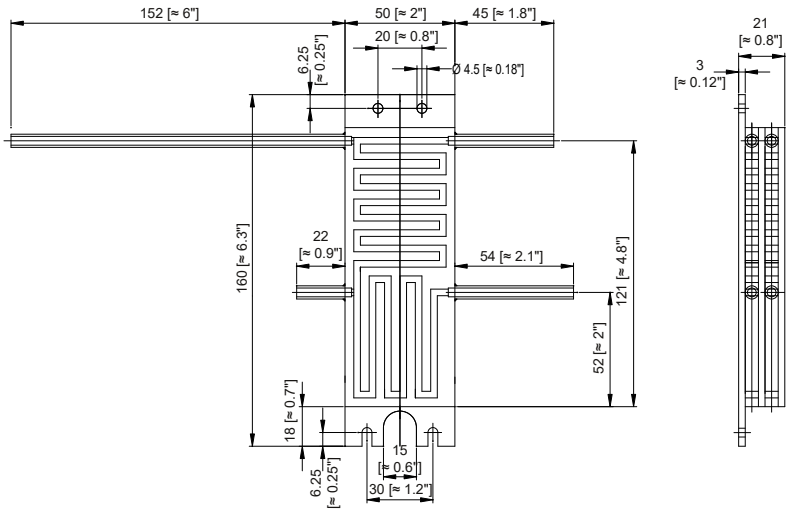

Dimensions in mm [Inches]

Technical Data

	Version GVW1	Version GVW2
Part No.	20S9058	20S9060
Material	Stainless steel SS 316Ti	
Operating temperature max.	350 °C [662 °F]	
Operating pressure max.	6 bar g	
Flow rate max. (GVW2 1/2 value per gas path)	-R, 2 bar inlet pressure: 3.0 m^3/h, with constant outlet temperature -R, 6 bar inlet pressure: 8.5 m^3/h, with outlet temperature drop of 10 °C in 1 min	
Gas connections	GVW1: 1/8" NPT i, GVW2: 6-mm-tube	
Option	SP2000-H/GVW, Part No. 20S9062 connection from the pre-heater GVW1 to the backpurging/calibration gas valve /R and gas inlet via 6-mm-tube made of SS 316Ti .	

M&C TechGroup Germany GmbH • Rehhecke 79 • 40885 Ratingen • Germany
info@mc-techgroup.com • www.mc-techgroup.com • P. +49 2102 . 935 - 0
Technical specifications and illustrations are without obligation, subject to modifications. 06.20 - 1.00.00

SP2000-H

Gas Sample Probe Series SP®

Versions SP2000, SP2000-H, SP2300-H, SP2400-H

Special Features

- **Optimum operational reliability**
- **Universal applicability**
- **Adaptation to nearly all process conditions due to its compact and modular design**
- **Easy installation and maintenance**
- **Low dead volume**

Application

The M&C sample probe versions SP2000, SP2000-H, SP2300-H and SP2400-H are used for continuous gas sampling from dust-loaded, high-temperature and/or humid processes.

Description

The sample probes are designed for easy installation, reliable operation and trouble-free maintenance. They are versatile in application and depending on the task to be performed, various sample tubes or pre-filters (see data sheets for sample tubes with G 3/4" connection thread and pre-filters with G 3/4" connection, with flange connection and with tube connection) that are not included in the scope of delivery, can be simply screwed into the probe (G 3/4" thread).

The depth filter element (ceramic is standard, optionally glass-fiber or spun-glass filling) with a large surface area is located in a housing with low dead volume outside the process.

The probes are designed in such a way that no tools are required when changing the filter element, the sample line does not have to be dismantled and contamination of the clean gas path is excluded.

The sample tube can be cleaned and purged back from outside the process. The special design of the heating element of the SP2000-H, SP2300-H, SP2400-H (with protective cover) permits controlled heating of the complete filter housing, including the mounting flange up to 180 °C [356 °F] (version /H320 up to 320 °C [608 °F]). This ensures reliable operation outside the process by preventing the temperature from falling below the dew point.

In the standard version, temperature control is carried out by an integrated capillary sensor thermostat with high-temperature limiter and alarm function for low temperature in a compact design. Test gas injection and reference sampling are also possible at the probe.

Depending on the gas composition, it is possible that the standard material of the probe body (stainless steel 316L) will not be sufficiently corrosion-resistant. In this case, probe SP2300-H made of PTFE or SP2400-H made of Titanium should be used.

Technical Data

Gas Sample Probe Version	SP2000	SP2000-H	SP2300-H	SP2400-H
Part No.	20S1000	20S2000	20S3000	20S3500
Protective cover	No	Yes	Yes	Yes
Degree of protection	IP54 EN 60529			
Filter housing material	Stainless steel 316Ti/316L*		PTFE	Titanium
Sealing materials	FKM* /7aT** = PTFE /H320** = graphite			
Probe flange sealing material	Novapress®			
Sample tube/pre-filter	Optional			
Sample pressure max.	0.4 to 6 bar* abs., /7aT**= 2 bar abs., /HP** = 25 bar abs.		0.4 to 2 bar abs.	0.4 to 6 bar abs.
Ambient temperature	20 to 180 °C [68 to 356 °F]	-20 to +60 °C*** [-4 to 140 °F***] /PT100, /Fe-CuNi, /Ni-CrNi** = -20 to +80 °C [-4 to 176 °F]		
Filter chamber volume	120 cm^3			
Filter element, porosity	S-2K150 = ceramic*, 2 µm /F-0,1GF150 = glass fiber**, 0.1 µm , /FW = spun glass**			
Thermostat, temperature adjustment		0 to180 °C* [32 to 356 °F*] /H320** = 0 to 320 °C [32 to 608 °F] /PT100** /Fe-CuNi** /Ni-CrNi**		
Ready for operation		After 40 min /H320** = after 60 min		
Low-temperature alarm contact*		Contact rating: 250 V, 3 A~, 0.25 A= Alarm point: ΔT 30 °C [86 °F]		
Sample gas outlet connection	1 x 1/4" NPT i* tube connectors ø 6, 8 or 10 mm** /H320**= 6 mm			
Blowback/test gas connection	1/4" NPTi* /R**, /H320**= tube ø 6 mm			
Power supply		230 V, 50/60 Hz, 800 W /115 V** = 115 V, 60 Hz, 800 W (fuse protection 10 A)		
Electrical connections		Terminals max. 4 mm^2, 2 x M20 x 1.5 cable glands		
Electrical equipment standard		EN 61010, EN 60519-1		
Mounting flange	DN 65 PN 6-B > DN or ANSI possible** /HP** = DN 50 PN 25			
Mounting flange material	SS 316Ti		PTFE	Titanium
Weight	7 kg* [≈ 15.4 lbs*]	15.4 kg* [≈ 34 lbs*]	15.4 kg* [≈ 34 lbs*]	14.5 kg* [≈ 32 lbs*]

* Standard
** Options (/H320 not for SP2300-H, /7aT** not for SP2300-H and SP2400-H)
*** For higher ambient temperatures, use option PT100 (Part No. 20S9025) or thermocouple Fe-CuNi and Ni-CrNi, respectively (Part No. 20S9027 or 20S9028) instead of the thermostat controller. Then, an additional electronic temperature controller (see data sheet "Microprocessor-Controlled Temperature Controller Type 70304") is necessary.
Novapress® is a registered trademark used for elastomer-bonded gasket materials produced by Frenzelit GmbH, Germany.

Differential pressure and T_{90} Time

ΔP and T_{90} at a flow rate of:	100	200	500	1000	1500	3000 (only /HF)	Nl/h
ΔP with new filter element S-2K150/GF150	0.007	0.011	0.02	0.058	0.135	0.240/0.225	bar
T_{90} time for SP2000-H without tube	6	3.5	1	< 0.5	< 0.5	< 0.5	s

Please note: Nl/h and Nl/min refer to the German standard DIN 1343 and are based on these standard conditions: 0 °C [32 °F], 1013 mbar.

Dimensions
SP2000-H Basic Version with Options (Examples)

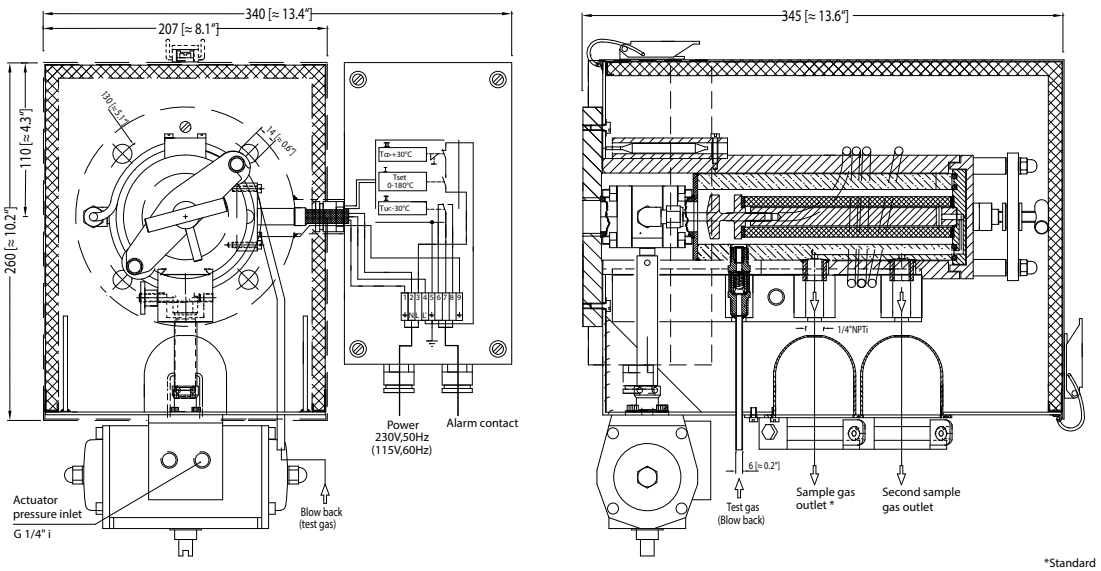

Dimensions in mm [inch]

M&C TechGroup Germany GmbH • Rehhecke 79 • 40885 Ratingen • Germany
info@mc-techgroup.com • www.mc-techgroup.com • P. +49 2102 . 935 - 0
Technical specifications and illustrations are without obligation, subject to modifications. 05.23 - 1.00.05

Basic Versions and Options (Selection)

Basic Versions	Version	Part No.
Basic version, non-heated, without weather protection shield, material: SS 316Ti	SP2000	20S1000
Basic version, heated from 0 to180 °C [32 to 356 °F], with weather protection shield, material: SS 316Ti	SP2000-H	20S2000
Basic version, heated from 0 to 180 °C [32 to 356 °F], with weather protection shield, material: PTFE	SP2300-H	20S3000(a)
Basic version, heated from 0 to 180 °C [32 to 356 F], with weather protection shield, material: titanium	SP2400-H	20S3500
Options integrated in the gas sample probe (extract)		
Power supply 115 V/60 Hz	/115V	20S9030
Top of filter case with PTFE rings and seals of PTFE	/7aT	20S9010
Second outlet for sample gas 1/4" NPT i	/2x	20S9015
Back-purging/calibration gas valve, opening pressure 0.7 bar, tube 6 mm, blowback and test gas feeding via filter chamber	/R	20S9045
Back-purging/calibration gas valve for SP2400-H, opening pressure 0.7 bar, 1/4" NPT i, blowback and test gas feeding via filter chamber	/R-Ti	20S9048
Fiber glass filter element 0,1GF150, filter porosity 0.1 µm, sealing PTFE	/GF150	20S9020
Special filter housing lid and screw-on receptacle incl. spun-glass filling, sealing FPM, Novapress®	/FW	20S9047
Special filter housing lid and screw-on receptacle incl. spun-glass filling for 320 °C [608 °F], sealing graphite	/FW 320	20S9046
Electrical heating of the external filter from 0 to 320 °C [32 to 608 °F]	/H320	20S9021
Version for max. 25 bar operating pressure, mounting flange DN 50 PN 25	/HP	20S9017
Gas pre-heater GVW1, material: SS 304	/GVW1	20S9058
Connection of the gas pre-heater to valve "R" and to gas inlet	/GVW	20S9062
PT00 sensor instead of the thermostat, without temperature controller	/PT100	20S9025
Thermocouple FE-CuNi (type J) instead of thermostat, without temperature controller	/Fe-CuNi	20S9027
Thermocouple Ni-CrNi (type K) instead of thermostat, without temperature controller	/Ni-CrNi	20S9028
Second PT100 sensor	/2-PT100	20S9026
Version with electrical safety separation according to VDE106T101 in connection with thermostat	/ST	20S9031
Steam heating, without controller and valves	/D	20S9033
Adapter flange size DN..PN 6 or ANSI..150 lbs	/DN	20S9004
Mounting fitting R2" a or 2"-NPT a instead of the mounting flange	/SO1	20S9005
Integrated 2-way ball valve with lock function in the inlet	/VA	20S9050
Integrated 3-way ball valve with T-function in the inlet	/3VA	20S9325
Integrated 2-way ball valve with lock function in the inlet, up to 320 °C [608 °F]	/VA320	20S9053
Integrated 3-way ball valve with T-function in the inlet, up to 320 °C [608 °F]	/3VA320	20S9330
Pneumatic drive for ball valves VA and 3VA, 2 operating states	/MS1	20S9055
Pneumatic drive for valves VA 320 °C [608 °F] and 3VA 320 °C [608 °F], 2 operating states	/MS3	20S9056
Electrical actuating drive for ball valves VA and 3VA, 2 operating states, 230 V/50 Hz	/EA230	20S9342
Electrical actuating drive for ball valves VA and 3VA, 2 operating states, 115 V/60 Hz	/EA115	20S9342a
Electrical actuating drive for ball valves VA and 3VA, 2 operating states, 24 V DC	/EA24	20S9342d
Filter housing lid for high flow rate with filter element 0,1GF	/HF	20S9016

Basic Version

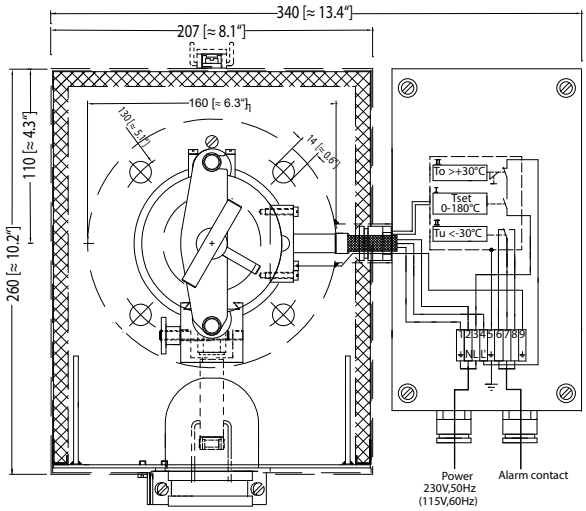

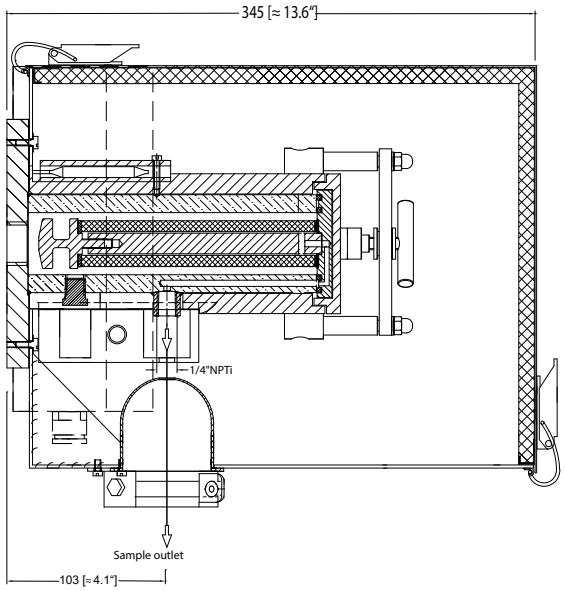

Dimensions in mm [inches]

Options for Basic Versions

Short term	SP2000	SP2000-H	SP2300-H	SP2400-H
/115V	–	X	X	X
/7aT	X	X	–	–
/2x	X	X	X	X
/R	X	X	X	X
/R-Ti	X	X	X	X
/GF150	X	X	X	X
/FW	X	X	–	X
/FW 320	–	X	–	X
/H320	–	X	–	X
/HP	X	X	–	–
/GVW1	–	X	X	X
/GVW	–	X	X	X
/PT100	–	X	X	X
/FeCuNi	–	X	X	X
/Ni-CrNi	–	X	X	X
/2-PT100	–	X	X	X
/ST	–	X	X	X
/D	–	X	X	X
/DN	X	X	–	–
/SO1	X	X	–	X
/VA	X	X	–	–
/3VA	X	X	–	–
/VA320	–	X	–	–
/3VA320	–	X	–	–
/MS1	X	X	–	–
/MS3	X	X	–	–
/EA230	X	X	–	–
/EA115	X	X	–	–
/EA24	X	X	–	–
/HF	X	X	–	–

– not possible
X possible

The above table only indicates the possible options for the different probe types. It does not provide information regarding the possible combinations of these options with each other in a probe model. In case you are looking for several options to be combined, please ask our sales team for technical advice.

M&C TechGroup Germany GmbH • Rehhecke 79 • 40885 Ratingen • Germany
info@mc-techgroup.com • www.mc-techgroup.com • P. +49 2102 . 935 - 0
Technical specifications and illustrations are without obligation, subject to modifications. 05.23 - 1.00.05

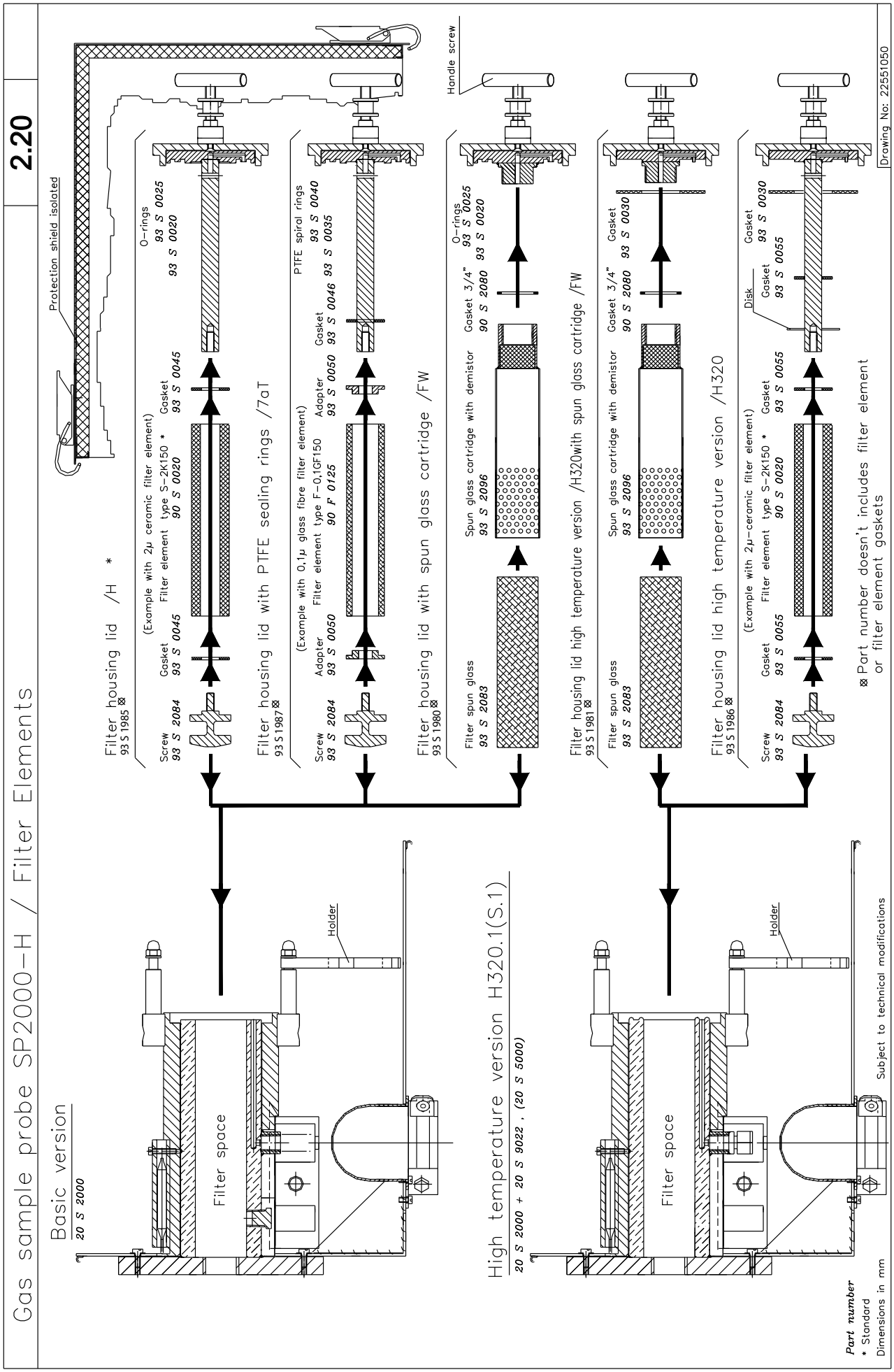
Gas sample probe SP2000-H / Filter Elements
2.20
Protection shield isolated
Handle screw
Filter housing lid /H *
93 S 1985 ⊠
Screw 93 S 2084
Gasket 93 S 0045
(Example with 2µ ceramic filter element)
Filter element type S-2K150 * 90 S 0020
Gasket 93 S 0045
O-rings 93 S 0025 93 S 0020
Filter housing lid with PTFE sealing rings /7aT
93 S 1987 ⊠
Screw 93 S 2084
Adapter 93 S 0050
(Example with 0,1µ glass fibre filter element)
Filter element type F-0,1GF150 90 F 0125
Adapter 93 S 0050
Gasket 93 S 0046
PTFE spiral rings 93 S 0040 93 S 0035
Filter housing lid with spun glass cartridge /FW
93 S 1980 ⊠
Filter spun glass 93 S 2083
Spun glass cartridge with demistor 93 S 2096
Gasket 3/4" 90 S 2080
O-rings 93 S 0025 93 S 0020
Filter housing lid high temperature version /H320with spun glass cartridge /FW
93 S 1981 ⊠
Filter spun glass 93 S 2083
Spun glass cartridge with demistor 93 S 2096
Gasket 3/4" 90 S 2080
Gasket 93 S 0030
Filter housing lid high temperature version /H320
93 S 1986 ⊠
Screw 93 S 2084
Gasket 93 S 0055
(Example with 2µ-ceramic filter element)
Filter element type S-2K150 * 90 S 0020
Gasket 93 S 0055
Disk
Gasket 93 S 0055
Gasket 93 S 0030
⊠ Part number doesn't includes filter element or filter element gaskets
Basic version
20 S 2000
Filter space
Holder
High temperature version H320.1(S.1)
20 S 2000 + 20 S 9022 , (20 S 5000)
Filter space
Holder
Subject to technical modifications
Part number
* Standard
Dimensions in mm
Drawing No: 22551050

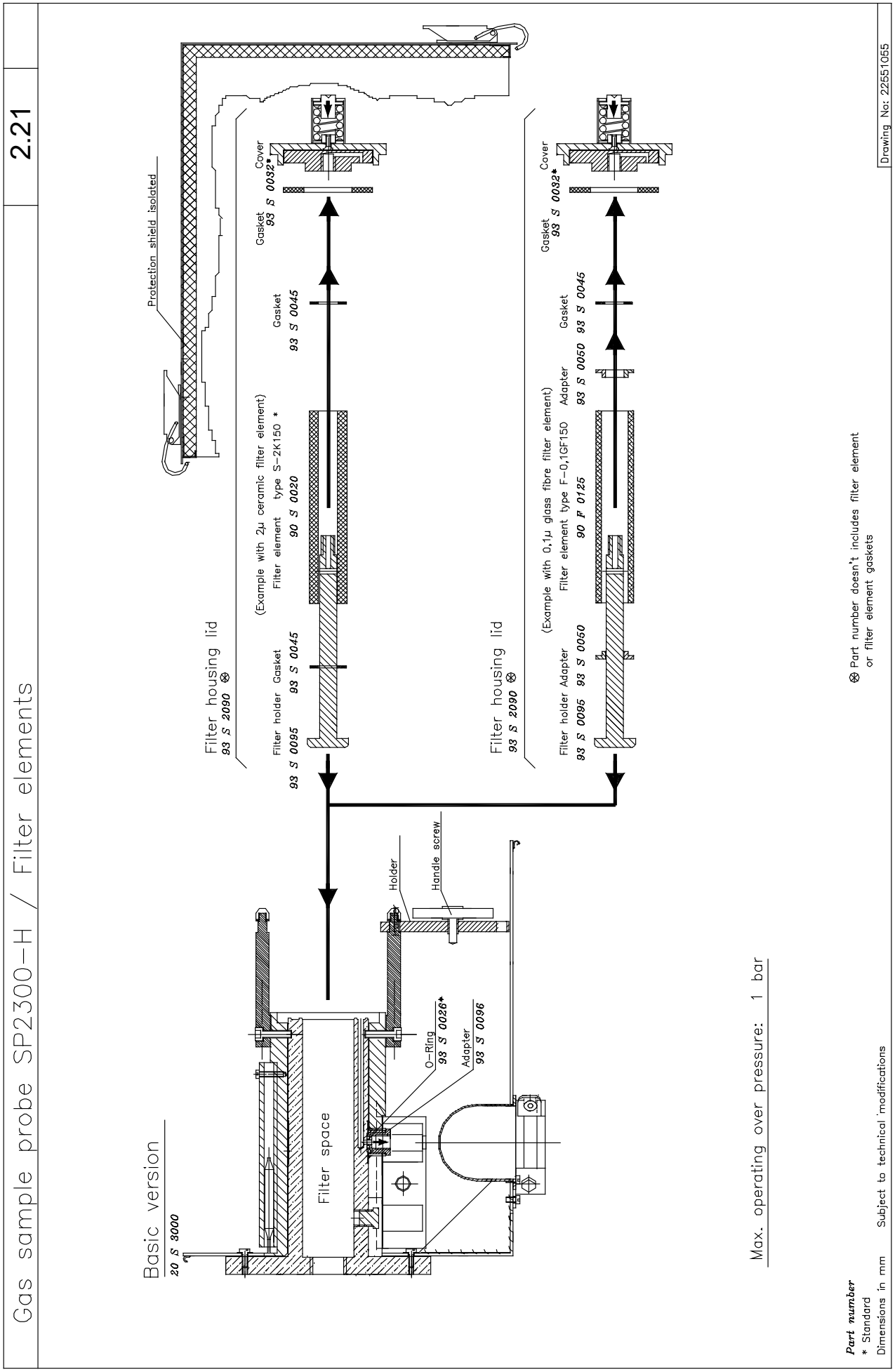

M&C TechGroup Germany GmbH • Rehhecke 79 • 40885 Ratingen • Germany
info@mc-techgroup.com • www.mc-techgroup.com • P. +49 2102 . 935 - 0

Technical specifications and illustrations are without obligation, subject to modifications. 05.23 - 1.00.05

Gas sample probe SP2000–H/D steam heated

2.24

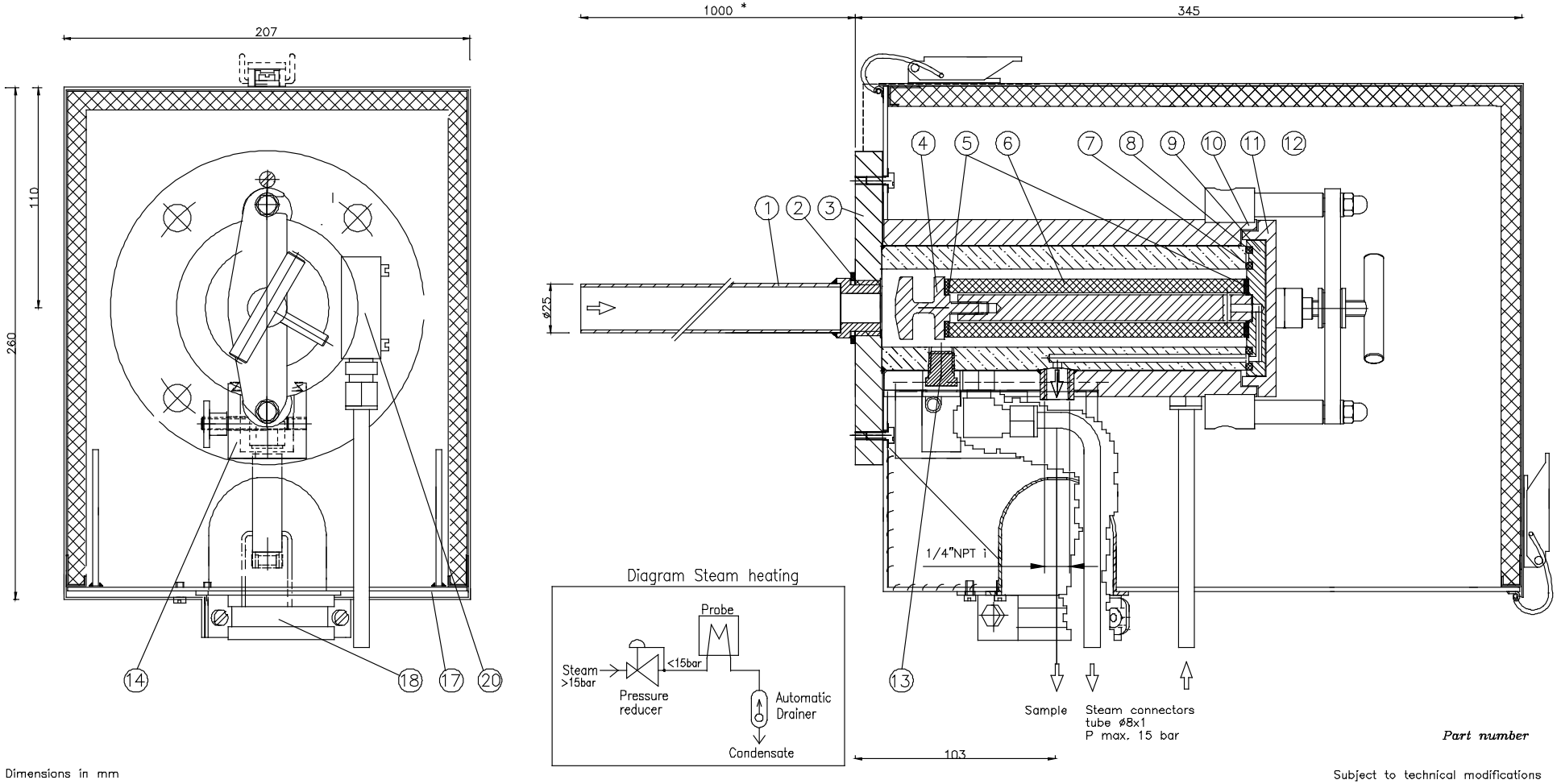

Dimensions in mm

Subject to technical modifications

Item	Description	Type	Part–No	Material
1	Sample tube with thread G3/4"		*20 S 9065*	SS316 *
2	Gasket 3/4"		*90 S 2080*	
3	Flange	DN65/PN6		SS316 *
4	Filter screw M6		*93 S 2084*	SS316
5	Gasket 30		*93 S 0045*	
6	Filter element 2 micron	S–2K–150	*90 S 0020*	Ceramic *
7	O–Ring 39		*93 S 0020*	*

Item	Description	Type	Part–No	Material
8	O–Ring 55		*93 S 0025*	*
9	Cover plate With filter holder	V		SS316 *
10	Al–heater body			Anodized Al
11	Al–cover plate			Anodized Al
12	Clamp			SS304
13	Plug			SS316
14	Thermal conductivity jaws			Anodized Al

Item	Description	Type	Part–No	Material
15				
16				
17	Weather protection shield		*93 S 0076*	painted Steel
18	Clamp 1 1/4"		*93 S 0065*	Steel
19				
20	Steam heater body with connectors	SP2000 /H/D	*20 S 9033*	Anodized Al
21				

Drawing No: 22551141

Technical specifications and illustrations are without obligation, subject to modifications. 05.23 - 1.00.05

M&C TechGroup Germany GmbH • Rehhecke 79 • 40885 Ratingen • Germany
info@mc-techgroup.com • www.mc-techgroup.com • P. +49 2102. 935-0

Gasentnahmesonde/Sample probe SP2000–H.../...VA...

2.25

Version mit 2–Wege–Kugelhahn zum Absperren für Prüfgasaufgabe oder Service
Anwendungsempfehlung: Filterwechsel, Reinigung usw. bei über–/Unterdruck, giftigen, korrosiven Gasen.

Type with 2–way ball valve to shut off for calibration or maintenance.
Recommended application: filter changing, cleaning etc. at over– or underpressure conditions, poisonous or corrosive samples.

Funktion / function	Version / type

2–Wege–Kugelhahn VA/2–way ball valve VA

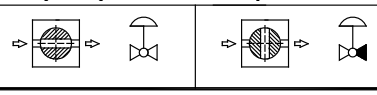

2–Wege–Kugelhahn VA zum Absperren der Gasentnahmesonde vom Prozeß.

2–way ball valve VA for shut off the sample probe from process.

Gasentnahmesonde / Sample probe
SP2000–H/VA

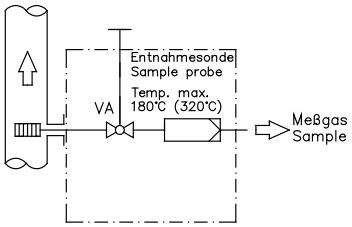

2–Wege–Kugelhahn VA zum Absperren der Gasentnahmesonde vom Prozeß Prüfgasaufgabe über Rückschlagventil R .

2–way ball valve VA for shut off the sample probe from process. Calibration gas trough checkvalve R .

Gasentnahmesonde / Sample probe
SP2000–H/R/VA

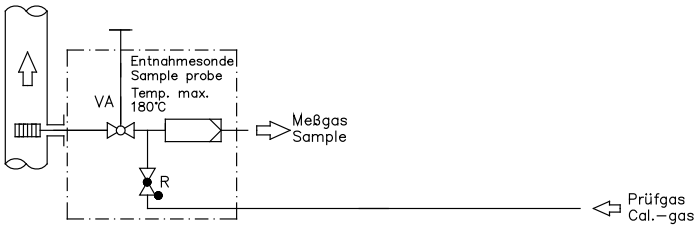

2–Wege–Kugelhahn VA mit pneum. Antrieb MS zum aut. Absperren der Gasentnahmesonde vom Prozeß.

2–way ball valve VA with pneum. actuator MS for aut. shut off the sample probe from process.

Gasentnahmesonde / Sample probe
SP2000–H/VA/MS–NC (NO)

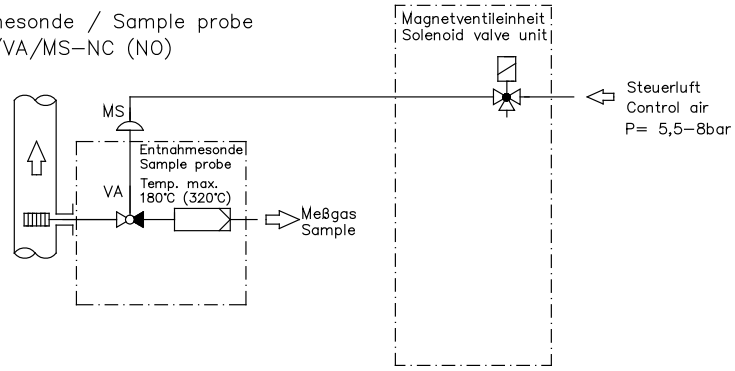

Version 320°C : pneum. Antrieb MS–DA mit 2.Steuermagnetventil (P=>6,5bar)/Type 320°C : pneum. actuator MS–DA with 2. control solonoid valve (P=>6,5bar)

2–Wege–Kugelhahn VA mit pneum. Antrieb MS zum aut. Absperren der Gasentnahmesonde vom Prozeß. Prüfgasaufgabe über Rückschlagventil R .

2–way ball valve VA with pneum. actuator MS for aut. shut off the sample probe from process. Calibration gas trough checkvalve R .

Gasentnahmesonde / Sample probe
SP2000–H/R/VA/MS–NC (NO)

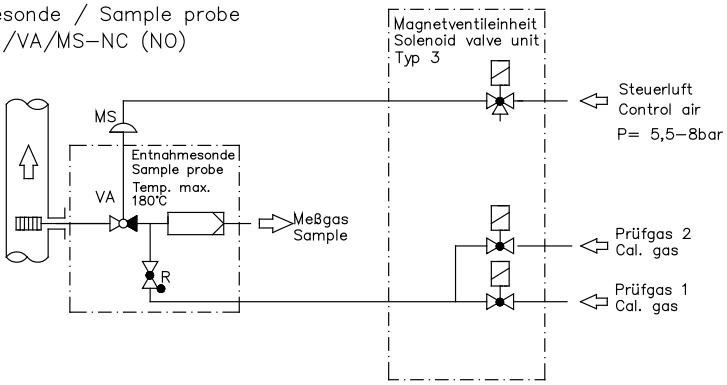

Zeichn.–Nr.: /Drawing No: 22551110

M&C TechGroup Germany GmbH • Rehhecke 79 • 40885 Ratingen • Germany
info@mc-techgroup.com • www.mc-techgroup.com • P. +49 2102 . 935 - 0

Technical specifications and illustrations are without obligation, subject to modifications. 05.23 - 1.00.05

Gasentnahmesonde/Sample probe SP2000–H.../...VA...

2.25

Version mit 3–Wege–Kugelhahn zum Absperren für Rückspülen, Prüfgasaufgabe oder Service
Anwendungsempfehlung: Filterwechsel, Reinigung usw. bei Über–/Unterdruck, giftigen, korrosiven Gasen.

Type with 3–way ball valve to shut off for backflush, calibration or maintenance.
Recommended application: filter changing, cleaning etc. at over– or underpressure conditions, poisonous or corrosive samples.

Funktion / function	Version / type
3–Wege–Kugelhahn 3VA zum Absperren der Gasentnahmesonde vom Prozeß. Rückspülung und Prüfgasaufgabe über Kugelhahn 3VA. 3–way ball valve 3VA to shut off the sample probe from process. Backflush and calibration through 3–way ball valve 3VA.	Gasentnahmesonde / Sample probe SP2000–H/3VA
3–Wege–Kugelhahn 3VA mit pneum. Antrieb MS (0–90°) zum autom. (Fernansteuerung) Absperren der Gasentnahmesonde vom Prozeß. Rückspülung (MS–B) oder Prüfgasaufgabe (MS–C) über Kugelhahn 3VA. 3–way ball valve 3VA with pneum. actuator MS (0–90°) to shut off the sample probe form process automatically Backflush (MS–B) or calibration (MS–C) through 3–way ball valve 3VA.	Gasentnahmesonde / Sample probe SP2000–H/3VA/MS–C (MS–B)
3–Wege–Kugelhahn 3VA mit pneum. Antrieb MS (0–90°) zum autom. (Fernansteuerung) Absperren der Gasentnahmesonde vom Prozeß. Rückspülung über Kugelhahn 3VA. Prüfgasaufgabe über Rückschlagventil R . 3–way ball valve 3VA with pneum. actuator MS (0–90°) to shut off the sample probe form process automatically. Backflush through 3–way ball valve 3VA. Calibration through check valve R .	Gasentnahmesonde / Sample probe SP2000–H/R/3VA/MS–B
3–Wege–Kugelhahn 3VA320 mit pneum. Antrieb 2MS–SO (0–90–180°)zum autom. Absperren der Gasentnahmesonde vom Prozeß. Rückspülung und Prüfgasaufgabe über Kugelhahn 3VA. 3–way ball valve 3VA320 with pneum. actuator 2MS–SO (0–90–180°) to shut off the sample probe from process automatically. Backflush and calibration through 3–way ball valve 3VA.	Gasentnahmesonde / Sample probe SP2000–H320/3VA320/2MS–SO

3–Wege–Kugelhahn 3VA/3–way ball valve 3VA

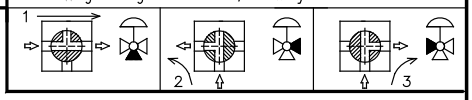

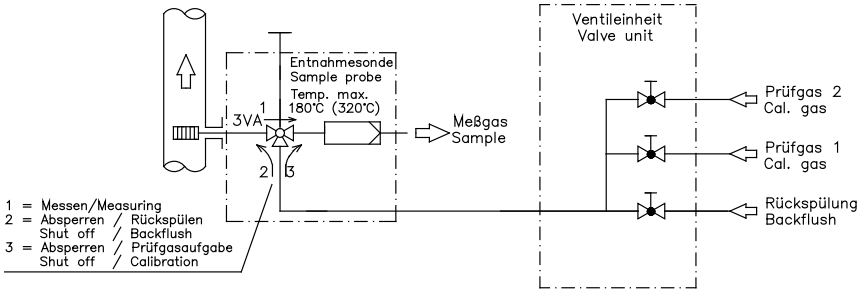

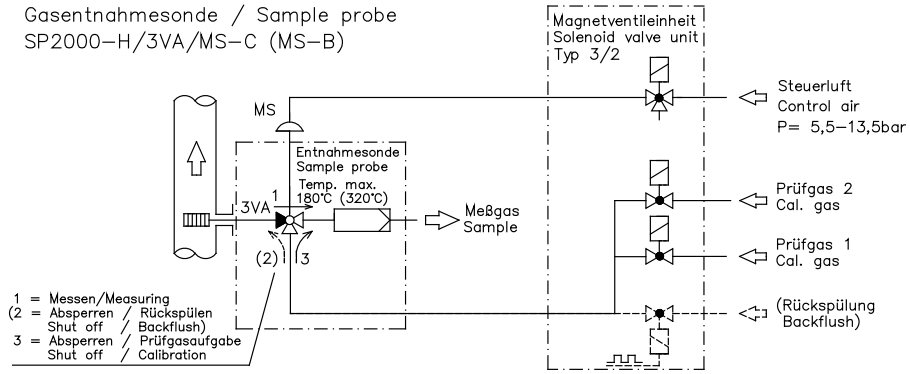

Version 320°C : pneum. Antrieb MS–DA mit 2.Steuermagnetventil (P=>6,5bar)/ Type 320°C : pneum. actuator MS–DA with 2. control solonoid valve (P=>6,5bar)

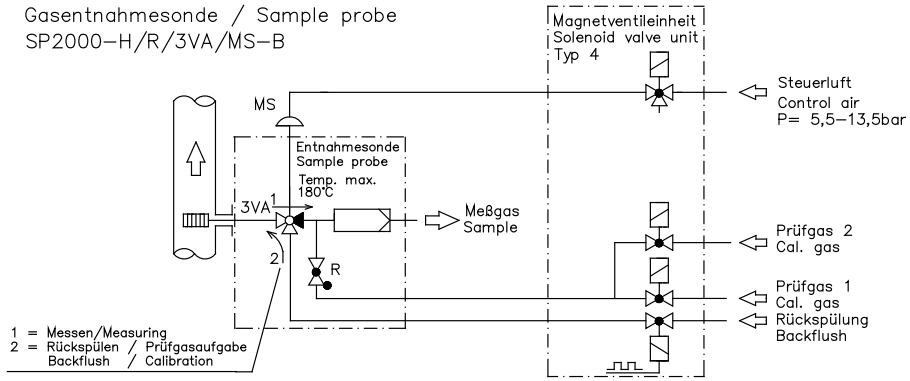

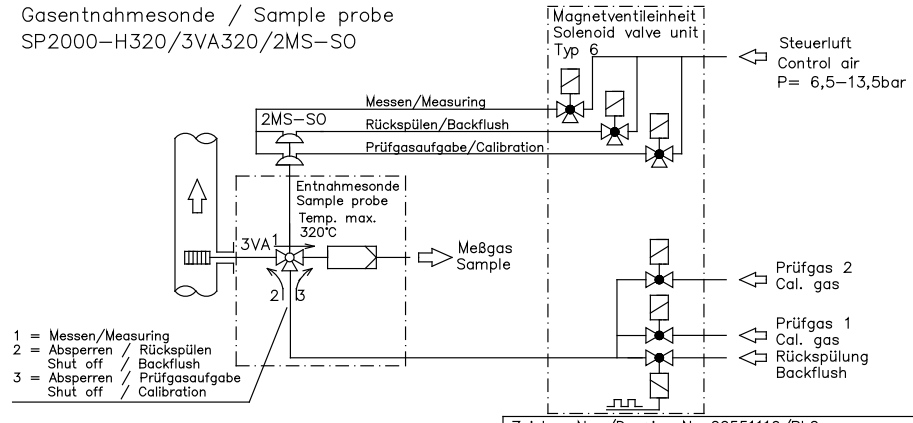

Zeichn.–Nr.: /Drawing No: 22551110/Bl.2

Solenoid valve unit 2 for gas sample probe SP2000/3VA/MS–B or /MS–C

2.26

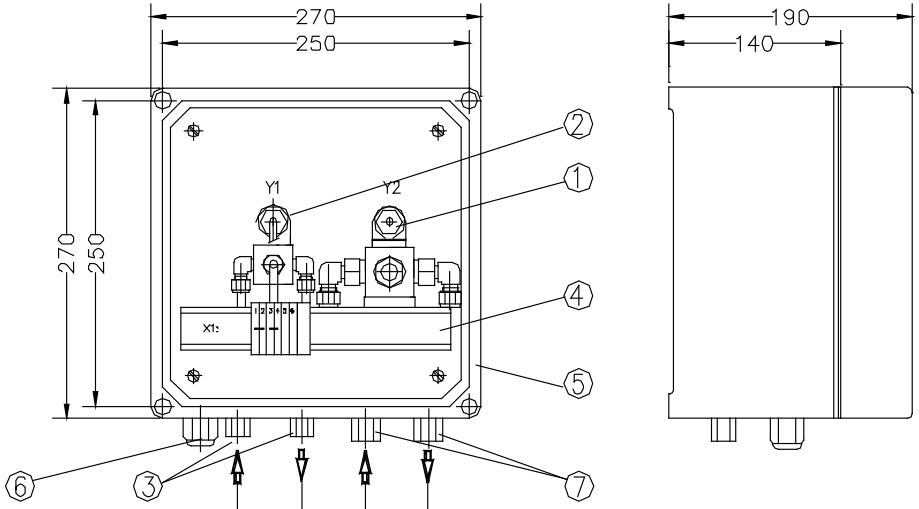

Control air IN

Control air OUT
(to probe SP2000)

Cal. gas or Backflush IN

Cal. gas or Backflush OUT
(to probe SP2000)

(3) Gas connections G1/4" female

(7) Gas connections G3/8" female

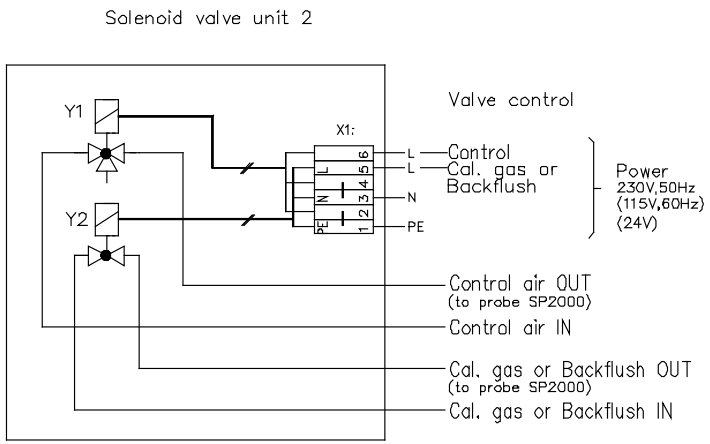

*Standard
Dimensions in mm

Part number
20S9845

Subject to technical modifications

Item	Description	Type	Part–No	Material	Item	Description	Type	Part–No	Material	Item	Description	Type	Part–No	Material
1	2–way solonoid valve	255		SS316, Viton	8					15				
2	3–way solonoid valve	6014		SS316, Viton	9					16				
3	Bulkhead union	DN4/6–G1/4"		PVDF	10					17				
4	terminals				11					18				
5	Box 270x270x150 mm			Polyester	12					19				
6	Cable gland	M20			13					20				
7	Bulkhead union	DN6/8–G3/8"		PVDF	14					21				

Drawing No: 22551060

M&C TechGroup Germany GmbH • Rehhecke 79 • 40885 Ratingen • Germany
info@mc-techgroup.com • www.mc-techgroup.com • P. +49 2102. 935 -0

Technical specifications and illustrations are without obligation, subject to modifications. 05.23 - 1.00.05

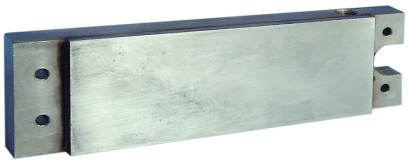

SP2000-H/GVW1

Gas Pre-Heater Series SP®

Version SP2000-H/GVW1(2)

Special Features

- **Prevents temperature drop below the dew point inside the probe**
- **Factory assembly**
- **2 variants with one or two paths**

Application

The M&C GVW1(2) gas pre-heater is used to pre-heat the backpurging or dilution gas of gas sample probes of the SP2000 series in order to prevent possible cooling down inside the gas sample probe. Subsequent problems related to temperatures drops below the dew point resulting in malfunction and corrosion are thus avoided.

Description

The M&C gas pre-heaters GVW1(2) consist of heat exchanger plates made of stainless steel and can be directly mounted to the heating system of the sample probe series SP2000-H.

The pre-heater type GVW2 is especially designed for the dilution probes SP2000-H/DIL. With its two gas paths, dilution gas as well as bypass gas can be pre-heated to achieve faster response times.

The optional backpurging connection to the probe of series SP2000-H is ensured via a 6-mm-tube (standard).

Technical specifications and illustrations are without obligation, subject to modifications. 06.20 - 1.00.00

M&C TechGroup Germany GmbH • Rehhecke 79 • 40885 Ratingen • Germany
info@mc-techgroup.com • www.mc-techgroup.com • P. +49 2102 . 935 - 0

Dimensions

GVW1

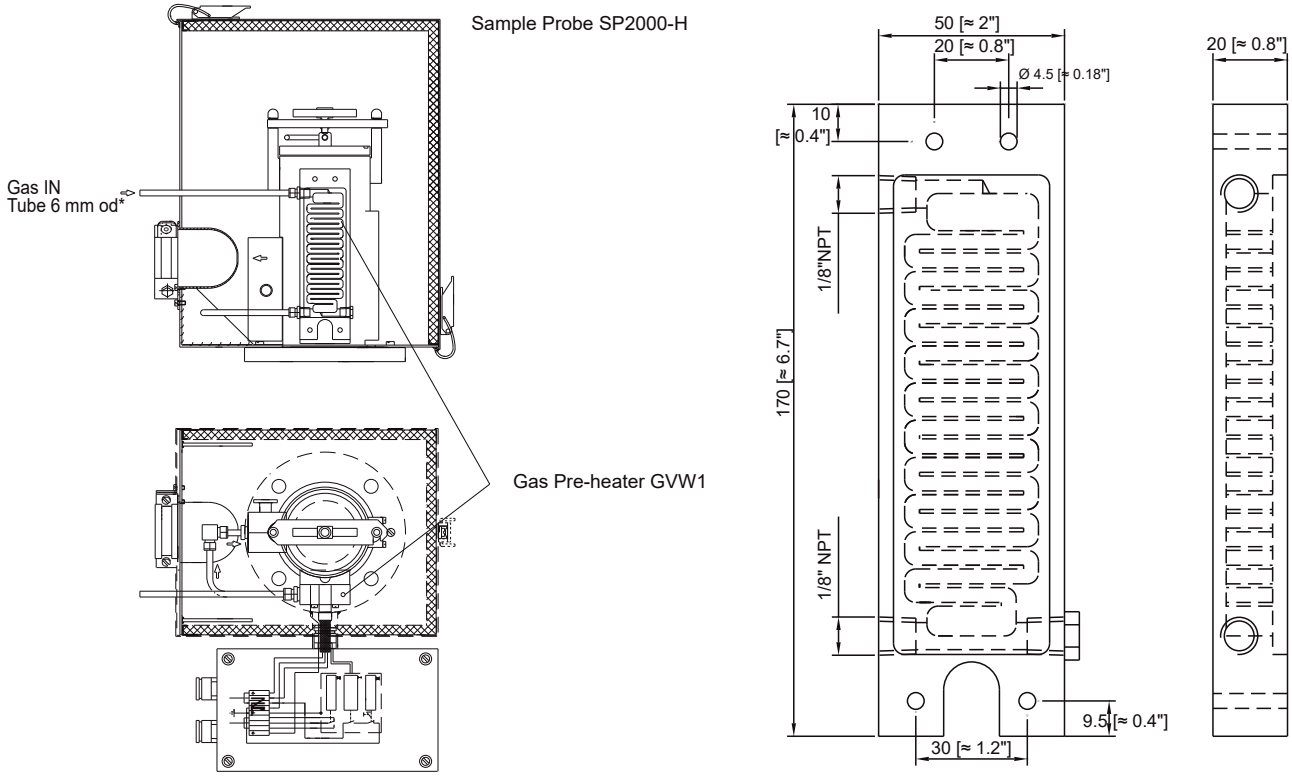

GVW2

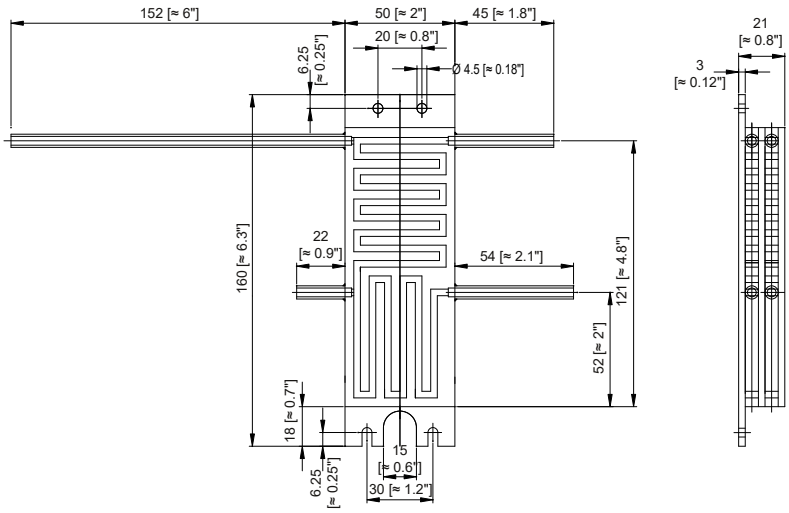

Dimensions in mm [Inches]

Technical Data

	Version GVW1	Version GVW2
Part No.	20S9058	20S9060
Material	Stainless steel SS 316Ti	
Operating temperature max.	350 °C [662 °F]	
Operating pressure max.	6 bar g	
Flow rate max. (GVW2 1/2 value per gas path)	-R, 2 bar inlet pressure: 3.0 m^3/h, with constant outlet temperature -R, 6 bar inlet pressure: 8.5 m^3/h, with outlet temperature drop of 10 °C in 1 min	
Gas connections	GVW1: 1/8" NPT i, GVW2: 6-mm-tube	
Option	SP2000-H/GVW, Part No. 20S9062 connection from the pre-heater GVW1 to the backpurging/calibration gas valve /R and gas inlet via 6-mm-tube made of SS 316Ti .	

M&C TechGroup Germany GmbH • Rehhecke 79 • 40885 Ratingen • Germany
info@mc-techgroup.com • www.mc-techgroup.com • P. +49 2102 . 935 - 0
Technical specifications and illustrations are without obligation, subject to modifications. 06.20 - 1.00.00

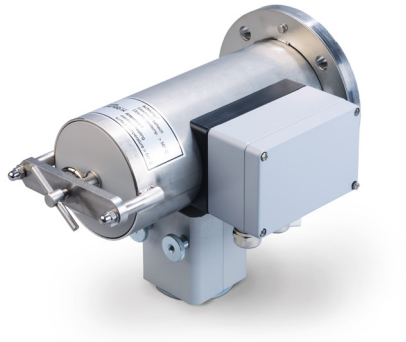

SP2100-H

Gas Sample Probe Series SP®

Electrically heated, compact version SP2100-H

Special Features

- **Sampling of dust-loaded process gases**
- **Small volume, fast response time**
- **Self-regulating electrical heating**
- **Alarm contact for low temperature**
- **Sample tube 1 m [≈ 3.3 ft] long**
- **Easy mounting and maintenance**

Application

The patented M&C gas sample probe version SP2100-H is used for continuous gas sampling.

Due to the compact design, only a small amount of space is required for installation. The gas sampling probe needs to be installed in a weather-protected place.

Description

The design of the M&C probe version SP2100-H is geared towards simple mounting, safe operation and trouble-free maintenance.

The filter element can be replaced without using tools and without dismantling the sample line. During the filter change, the filter holder is completely removed from the filter chamber. Easy inspection of the sealing elements, straightforward cleaning of the filter chamber and the possibility of pushing through the sample tube without removing the probe are just a few of the many advantages offered by the M&C probes.

The large-area ceramic depth filter element with 2 µm filter porosity is located in a heated filter chamber made of stainless steel.

The compact design and the heat insulation on all sides guarantee optimum heat distribution and safe operation without temperatures falling below the dew point in the filter or probe flange area.

The gas sampling probe is heated up to +180 °C [356 °F] by special self-regulating heating elements. The mains voltage ranges from 110 V to 240 V without any necessary switching.

An external temperature controller or temperature limitation is not required. A separate thermal switch (< 160 °C [320 °F], NO) is provided for low temperature monitoring. The electrical connections are located in a terminal box.

The scope of delivery includes a 1 m [3.3 ft] long stainless steel sample tube which is screwed into the mounting flange. The max. sample temperature for this is 600 °C [1112 °F].

The heated double-jacket sample tubes SP30-H or SP35-H are used for long and cold assembly stubs or when the dew point in the process chamber is underrun.

To meet specific sampling requirements, you will find additional sample tubes and prefilters in the extensive range of M&C probe accessories.

Technical specifications and illustrations are without obligation, subject to modifications. 12.22 - 1.00.02

M&C TechGroup Germany GmbH • Rehhecke 79 • 40885 Ratingen • Germany
info@mc-techgroup.com • www.mc-techgroup.com • P. +49 2102 . 935 - 0

Technical Data

Probe series SP*	Compact Version SP2100-H	
Part No.	10S1000	10S1100
Sample tube	Type SS, stainless steel 316Ti, length 1 m [≈ 3.3 ft]*	No
Sample temperature	Max. 600 °C [1112 °F]*	
Sample pressure	0.4 to 2 bar abs.	
Ambient temperature	-20 to +60 °C [-4 to 140 °F]	
Recommended for dust loading	Up to 2 g/m³*	
Filter chamber volume	120 ml	
Filter element	S-2K 150, filter porosity 2 µm, ceramic	
Probe heating temperature	+180 °C [356 °F], self-regulating	
Ready for operation	After 2 hours	
Temperature alarm contact, alarm point	< 160 °C [< 320 °F], NO	
Temperature alarm, contact rating	250 V - 3 A AC, 30 V - 3 A DC	
Connection sample outlet	1/4" NPT inside, for max. ø 10 mm tube connectors	
Power supply	110 up to 240 V, 50/60 Hz	
Power consumption	Start up: 400 VA, operation mode: 100 VA, fuse: 6 A	
Electrical connection	Terminals max. 2.5 mm², 2 x PG11 cable glands	
Electrical equipment standard	EN 61010, EN 60335-1	
Degree of protection	IP54, EN 60529	
Mounting flange	DN 65 PN 6, B, stainless steel 316Ti	
Material of sample contacting parts	SS 316/316Ti, FPM, ceramic	
Weight	9 kg [≈ 19.8 lbs]	
Options		
10S9005	Calibration flange, DN 65 PN 6 with 1/8" NPT connection including flange gasket and screw set M12 x 80.	

* Standard, other versions on request.

ΔP and T90 at a flow rate of:	100	200	500	1000	Nl/h
	1.7	**3.3**	**8.3**	**16.7**	**LPM**
ΔP pressure loss with new filter element S-2K150	7	11	20	35	mbar
T_{90} time – without sample tube/pre-filter –	6.0	3.5	1.0	< 0.5	sec

Dimensions

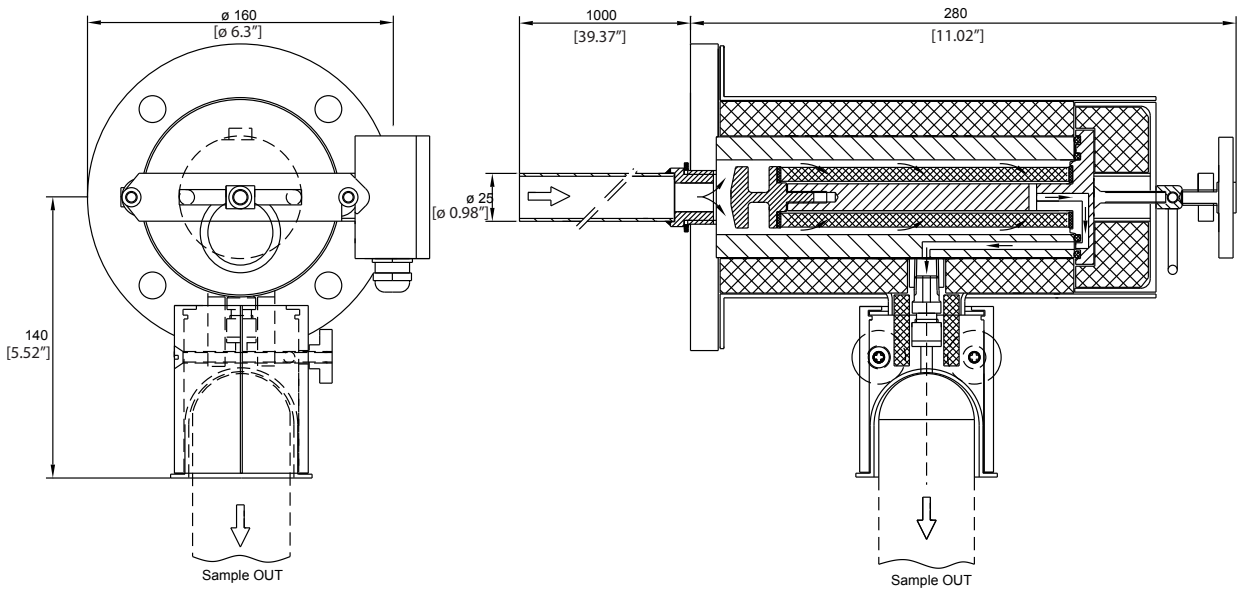

Dimensions in mm [inch]

M&C TechGroup Germany GmbH • Rehhecke 79 • 40885 Ratingen • Germany
info@mc-techgroup.com • www.mc-techgroup.com • P. +49 2102 . 935 - 0

Technical specifications and illustrations are without obligation, subject to modifications. 12.22 - 1.00.02

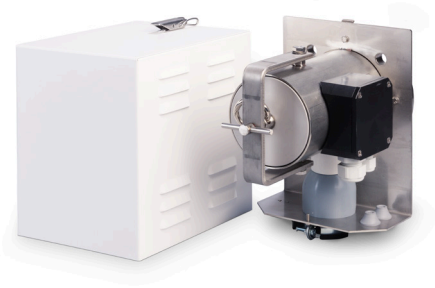

SP210-H

Gas Sample Probe Series SP®

Electrically heated, compact versions SP210-H/SP210-H/W

Special Features

- **Sampling of dust-loaded process gases**
- **Small volume, fast response time**
- **Easy installation and maintenance**
- **Self-regulating electrical heating**
- **Alarm contact for low temperature**
- **Outdoor mounting with protective cover**
- **Sample tube optional**

Application

The electrically heated M&C gas sample probes versions SP210-H and SP210-H/W are applicable for continuous gas sampling. The compact design requires only limited space. The gas sample probe SP210-H/W is equipped with an extra weather protection cover and is preferably used for outdoor mounting.

Description

The design of the M&C gas sample probe versions SP210-H and SP210-H/W guarantees easy installation, safe operation and problem-free maintenance.

The filter element can be replaced without tools and without dismantling the sample line. When the filter is changed, the filter unit is completely removed from the filter chamber. Simple inspection of the sealing elements, easy cleaning of the filter chamber, the possibility of pushing through the sample tube without dismantling the probe are just a few of the many advantages which M&C probes offer.

The heated stainless steel filter receptacle contains the ceramic depth filter element with 2 µm filter porosity. The compact design and the heat insulation on all sides guarantee optimum heat distribution and safe operation without the temperature falling below the dew point in the filter or probe flange area.

Heating is provided by special self-regulating heating elements up to +180 °C [356 °F] in the range from 110 V to 240 V mains voltage without any switching.

An external temperature controller or temperature limiter is not required. A separate thermal switch (< 160 °C [320 °F], NO) is provided for low temperature monitoring. The electrical connection is provided in a terminal box.

The gas sample probe SP210-H/W equipped with a protective cover that can be opened with quick clamps is recommended for outdoor mounting.

The stainless steel sample tube SP210/SS (option) is screwed into the mounting flange. The maximum operating temperature of the stainless steel (316Ti) tube is 600 °C [1112 °F].

In case of long and cold mounting nozzles or if the dew point in the process chamber is underrun, the heated double-jacket sample tubes SP30-H or SP35-H are used.

To solve specific sampling problems, you will find further sample tubes and pre-filters in M&C's extensive range of probe accessories.

Technical specifications and illustrations are without obligation, subject to modifications. 12.22 - 1.00.00

M&C TechGroup Germany GmbH • Rehhecke 79 • 40885 Ratingen • Germany
info@mc-techgroup.com • www.mc-techgroup.com • P. +49 2102 . 935 - 0

Technical Data

Probe Series SP®	Compact Version SP210-H	Compact Version SP210-H/W
Part No.	02S1000	02S1010
Protective cover	No	Yes
Degree of protection	IP54 EN 60529	IP55 EN 60529
Sample tube	SS210/SS optional*, operating temperature max. 600 °C [1112 °F]	
Flow rate	Max. 500 Nl/h at 600 °C [1112 °F]	
Sample pressure	0.4 to 2 bar abs.	
Ambient temperature	-20 to +60 °C [-4 to 140 °F]	
Dust level	Max. 1 g/m³	
Filter chamber volume	100 ml	
Filter element	Type S-2K, filter porosity 2 µm, ceramic	
Probe heating	+180 °C [356 °F) self-regulating	
Ready for operation	After 2 hours	
Low-temperature alarm contact, alarm point	< 160 °C [320 °F], NO	
Low-temperature alarm contact, contact rating	250 V-3 A AC, 30 V-3 A DC	
Connection sample outlet	1/4" NPT inside with Swagelok® tube connector ø 6 x 1 mm	
Power supply	110 up to 240 V, 50/60 Hz	
Power consumption	Start up: 400 VA, usual: 100 VA, (fuse 6 A)	
Electrical connection	Terminals max. 2.5 mm², 2 x PG11 cable glands	
Electrical equipment standard	EN 61010, EN 60335-1	
Mounting flange	DN 65 PN 6, form B, stainless steel 316Ti	
Material of sample-contacting parts	Stainless steel 316/316Ti, FPM, ceramic	
Dimensions (W x H x D)	170 x 220 x 230 mm [≈ 6.7" x 8.7" x 9.1"]	170 x 220 x 235 mm [≈ 6.7" x 8.7" x 9.3"]
Weight	6.5 kg [≈ 14.3 lbs]	8.5 kg [≈ 18.7 lbs]
Options		
02S9200	Sample tube out of stainless steel 316Ti type SP210/SS, connection G 3/4" o, ø 10/12, length 1 m [≈ 3.3 ft]*, incl. flange gasket.	
10S9005	Calibration flange, DN 65 PN 6 with 1/8" NPT connection including flange gasket and screw set M 12 x 80.	

* Standard, other versions upon request.
Swagelok® is a registered trademark for tube fittings by Swagelok Company, USA.
Please note: Nl/h and Nl/min refer to the German standard DIN 1343 and are based on these standard conditions: 0 °C [32 °F], 1013 mbar.

ΔP and T90 at a flow rate of:	100	200	500	Nl/h
ΔP pressure loss with new filter element S-2K	4	7	15	mbar
T90 time with sample tube SP210/SS	4.0	2.5	< 1.0	sec.

Dimensions

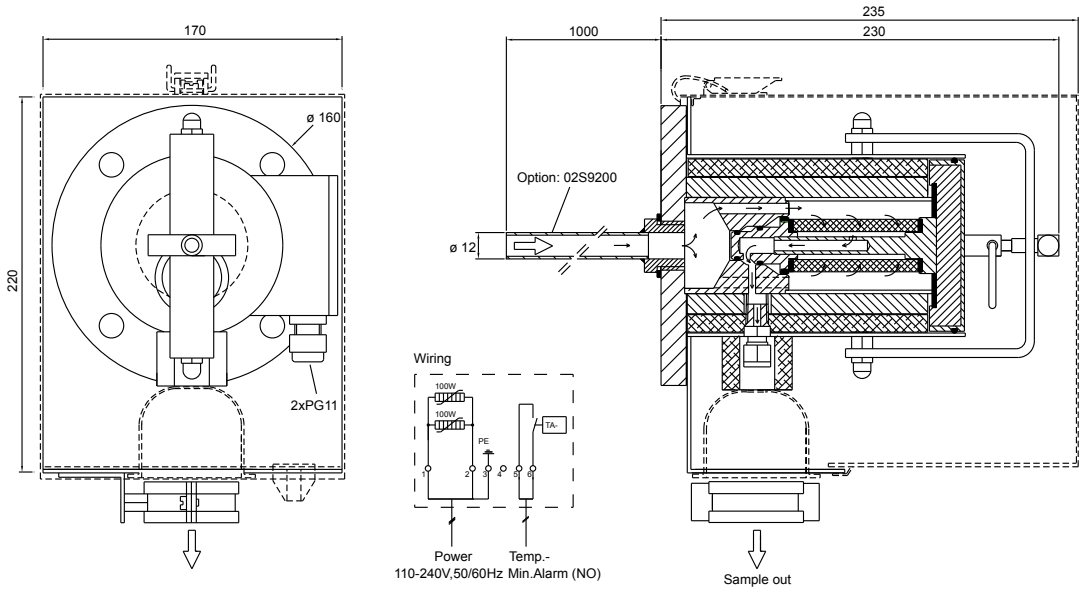

Dimensions in mm

M&C TechGroup Germany GmbH • Rehhecke 79 • 40885 Ratingen • Germany
info@mc-techgroup.com • www.mc-techgroup.com • P. +49 2102 . 935 - 0
Technical specifications and illustrations are without obligation, subject to modifications. 12.22 - 1.00.00

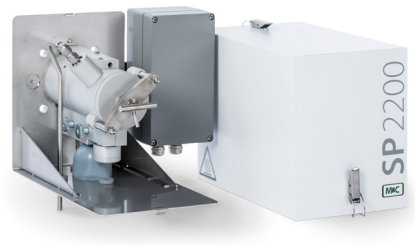

SP2200-H/C/I/BB(/F)

Gas Sample Probe Series SP®

Versions SP2200-H/C/I/BB and SP2200-H/C/I/BB/F electrically heated

Special Features

- **Heated gas sample probe with integrated valve functions for:**
- **Injecting calibration gas**
- **Shutting off the probe outlet**
- **Blowback function**

Description

The M&C probe series SP2000-H was extended by the versions SP2200-H/C/I/BB and SP2200-H/C/I/BB/F.

The following options are included:	SP2200-H...
Calibration gas connection	Tube connector 6 mm o.d.
Blowback gas connection	Tube connector 8 mm o.d.
Calibration gas injection valve	/C
Isolation valve	/I
Valve for blowback of the filter housing area	/BB
Valve for blowback of the integrated ceramic filter	/BB/F

- The calibration gas can be directly injected to the probe outlet via the check valve /C. This allows calibration gas to be supplied without gas loss via the otherwise open probe inlet.
- An isolation valve /I shuts off the sample outlet from the heated filter chamber.
- With a high-flow rate check valve /BB, which protrudes into the heated filter chamber, blowback of the filter chamber, the sample tube and the pre-filter is carried out.
- With a high-flow rate check valve /BB/F, which is fixed to the heated filter chamber wall, blowback of the integrated ceramic filter including the filter chamber, the sample tube and the pre-filter is carried out.

To prevent the probe from cooling down, the gas used for blowback should be injected in short pulses.

Technical Data

	SP2200-H/C/I/BB	SP2200-H/C/I/BB/F
Part Number	20S2010	20S2015
Operating temperature	Max. 180 °C [356 °F]	
Power supply	230 V/50 Hz, 800 W, optional 115 V/60 Hz	
Calibration gas valve /C	Check valve, valve opening pressure: > 0.7 bar gauge, ø 6 mm tube connector	
Isolation valve /I	Bellow valve with pneumatic actuator, control pressure: 3 to10 bar gauge, connection: 1/8" NPT i	
Blowback valves /BB+/BB/F	High flow-rate check valve, valve opening pressure: > 0.7 bar gauge, recommended: 3 to 6 bar gauge To prevent the probe from cooling down, the blowback gas should be injected in short pulses. Connection: tube connector 8 mm o.d.	
Flange	Material: stainless steel 316Ti, dimensions: DN 65 PN 6 B	

For further technical information, see data sheet of standard gas sample probe SP2000-H

Dimensions

Gas Sample Probe Series SP® with Calibration Gas Injection, Isolation Valve and Blowback

SP2200-H/C/I/BB

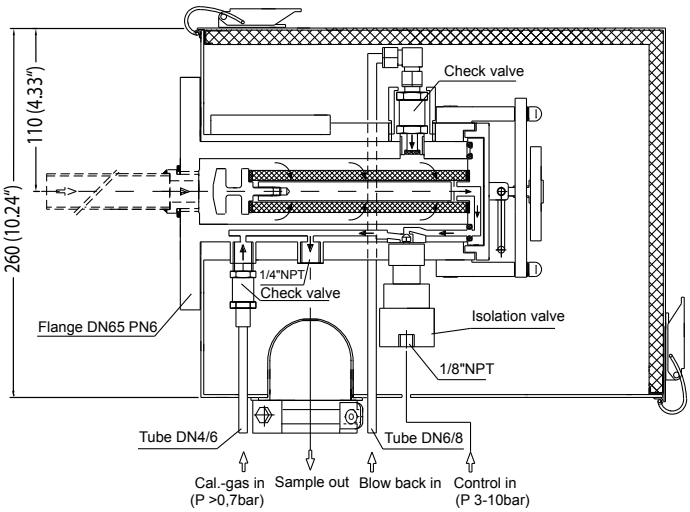

SP2200-H/C/I/BB/F

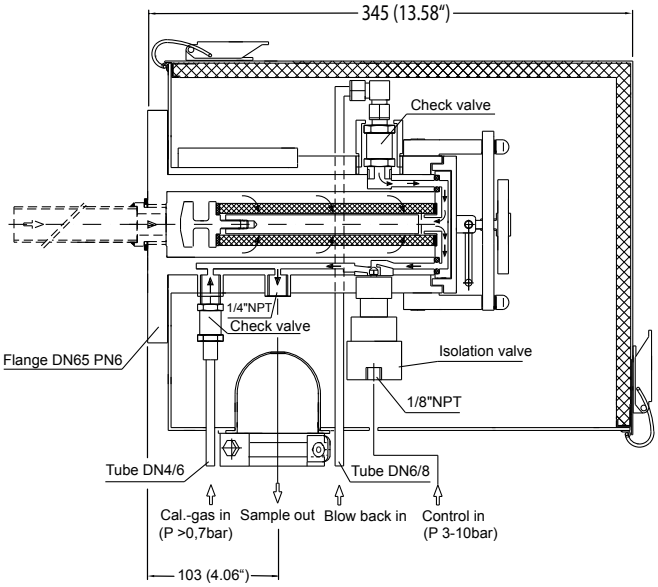

Dimensions in mm (inch)

M&C TechGroup Germany GmbH • Rehhecke 79 • 40885 Ratingen • Germany
info@mc-techgroup.com • www.mc-techgroup.com • P. +49 2102 . 935 - 0
Technical specifications and illustrations are without obligation, subject to modifications. 12.22 - 1.00.02

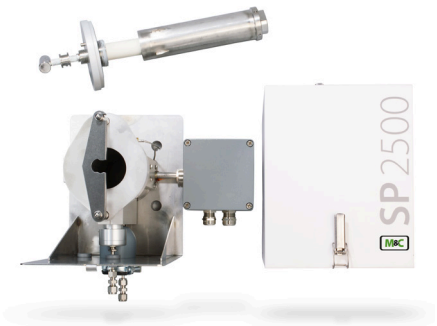

SP2500-H/C/I/BB/V20/AB-SS

Gas Sample Probe Series SP®

Versions SP2500-H, SP2500-H/C/I/BB, SP2500-H/C/I/BB/F, electrically heated

Special Features

- **Extractable sample tube or pre-filter, without dismounting the probe**
- **Integrated blowback possibility with shutting off the sample gas outlet**
- **High operational reliability**
- **Universal applicability**
- **Adaptation to nearly all process conditions due to its compact and modular design**
- **Easy installation**
- **Minimum maintenance**
- **Low dead volume**

Application

The M&C gas sample probes type SP2500-H based on the version SP2000-H (for more information see SP2000-H data sheet) are used for continuous gas sampling in processes with high dust levels, high temperatures and/or high gas humidity. They offer the possibility of removing the pre-filter or the sample tube from the process, e.g. for cleaning purposes, without dismantling the complete gas sample probe.

The probes type SP2500-H/C/I/BB and SP2500-H/C/I/BB/F with special blowback possibility are used in case of very high dust levels. For this purpose, they are equipped with an additional blowback valve and a pneumatic isolation valve in the sample gas outlet.

Description

The M&C gas sample probes are designed for easy installation, reliable operation, trouble-free maintenance and universal applicability. Depending on the application, different sample tubes or pre-filters, not included in the scope of delivery of the probe, are screwed into the thread (G 3/4" i) of the filter housing. (See data sheets for sample tubes with G 3/4" connection thread and pre-filters with G 3/4" connection thread)

The large surface ceramic filter element (also glass-fiber elements or spun-glass fillings are available) is placed in a housing with low stagnant space outside the process.

The M&C gas sample probes are designed in such a way that changing a filter element does not involve the use of tools. In this operation, the sample line does not need to be removed, thus avoiding contamination of the clean gas path and also maintaining the integrity of the system.

The sample tube and the pre-filter can be cleaned by extracting the filter from the probe. The special design of the heating element of the probes type SP2500-H (with protective cover) permits controlled heating of the complete filter housing, including the mounting flange up to 180 °C [356 °F]. This ensures reliable functioning outside the process so that safe operation is ensured without the temperature falling below the dew point.

The temperature of the standard probe is controlled by an integrated compact-design capillary sensor thermostat with a high-temperature limiter and an alarm function for temperature failure. The probe SP2500-H provides the possibility to feed the calibration gas /C optionally via a check valve.

Additional functions of the probe SP2500-H/C/I/BB(/F):

- Calibration gas is injected into the probe through a check valve /C directly to the sample outlet. No calibration gas is lost into the stack.
- An isolation valve with pneumatic control /I shuts off the sample outlet from the heated filter chamber.
- With a high flow rate check valve /BB, which protrudes into the heated filter chamber, blowback of the filter chamber, the sample tube or the pre-filter is carried out.
- With a high flow rate check valve / BB/F, which is fixed to the heated filter chamber wall, blowback of the filter element including the filter chamber, the sample tube or the pre-filter is carried out.

Technical Data

Gas Sample Probe Version	SP2500-H	SP2500-H/C/I/BB	SP2500-H/C/I/BB/F
Part No.	20S3510	20S3520	20S3530
Integrated blowback	No	Via filter chamber	Via filter element
Protective cover	Yes		
Terminal box	IP54 EN 60529		
Filter housing material	Stainless steel 316L/316Ti*		
Sealing materials	FKM*		
Probe flange sealing material	Novapress®		
Sample tube/pre-filter	Optional		
Sample pressure max.	0.4 to 6 bar* abs.		
Ambient temperature	-20 to +60 °C*** [-4 to 140 °F]*** /PT100, /Fe-CuNi, /Ni-CrNi** = -20 to +80 °C [-4 to 176 °F]		
Filter chamber volume	280 cm^3		
Filter element, porosity	S-2K150 = ceramic*, 2 µm, /F-0, 1GF150 = glass fiber**, 0.1 µm, /FW = spun glass**		
Thermostat, temperature adjustment	0 to180°C* [32 to 356 °F]* /PT100** /Fe-CuNi** /Ni-CrNi**		
Ready for operation	After 40 min		
Low-temperature alarm contact	Change-over contact contact rating: 250 V, 3 A~, 0.25 A = Alarm point: ΔT 30 °C		
Sample gas outlet connection	1 x 1/4" NPT i* tube connectors ø 6, 8 or 10 mm**		
Blowback/test gas connection	1/4" NPT i* /C**= tube ø 8 mm	Blowback: tube Ø 8 mm, span: tube Ø 6 mm	
Shut off valve connection /I		1/8" NPT i	
Pressure range contol air /I	3 to 10 bar		
Power supply	230 V, 50/60 Hz, 800 W /115 V** = 115 V, 60 Hz, 800 W (fuse protection 10 A)		
Electrical connections	Terminals max. 4 mm^2, 2 x PG 13.5 cable gland		
Electrical equipment standard	EN 61010, EN 60519-1		
Mounting flange	DN 65 PN 6 Form B, SS 316Ti* >DN or ANSI possible**		
Weight	17 kg* [≈ 37.5 lbs*]		

* Standard
** Options
*** In case of higher ambient temperatures, use option PT100 (Part No. 20S9025) or thermocouple Fe-CuNi and Ni-CrNi, respectively (Part No. 20S9027 or 20S9028) instead of the thermostat controller. Then, an additional electronic temperature controller (see data sheet "Microprocessor-Controlled Temperature Controller Type 70304") is necessary.
Please note: Nl/h and Nl/min refer to the German standard DIN 1343 and are based on these standard conditions: 0 °C [32 °F], 1013 mbar.

Differential pressure and T_{90} Time

ΔP and T90 at a flow rate of:	100	200	500	1000	1500	Nl/h
ΔP with new filter element S-2K150/GF150	0.007	0.011	0.02	0.035	0.040	bar
T90 time for SP2500-H... without tube	8	5.5	3	1	0.5	s

Versions and Options (Extract)

Versions	Version	Part No.
Basic version, heated from 0 to 180 °C [32 to 356 °F], with weather protective cover, material: SS 316Ti	SP2500-H	20S3510(a)
Basic version, heated from 0 to 180 °C [32 to 356 °F], with weather protective cover, material: SS 316Ti	SP2500-H/C/I/BB	20S3520
Basic version, heated from 0 to 180 °C [32 to 356 °F], with weather protective cover, material: SS 316Ti	SP2500-H/C/I/BB/F	20S3530(a)
Options (Extract)		
Version with power supply 115 V/60 Hz	/115V	20S9030
Version with second outlet for sample gas 1/4" NPT i*	/2x*	20S9015
Version with blowback/calibration gas valve, opening pressure 0.7 bar, tube 8 mm o.d.*	/C*	20S9435
Version with fiber-glass filter element 0,1GF150, filter porosity: 0.1 µm, sealing: PTFE	/GF150	20S9020
Version with with PT100 sensor instead of thermostat, without temperature controller	/PT100	20S9025
Version with thermocouple FE-CuNi (type J) instead of thermostat, without temperature controller	/Fe-CuN	20S9027
Version with thermoelement Ni-CrNi (type K) instead of thermostat, without temperature controller	/Ni-CrNi	20S9028
Version with second PT100 sensor	/2-PT100	20S9026
Version with special adapter flange size DN ... PN 6 or ANSI...150 lbs	/DN	20S9004
Version with gas pre-heater GVW1, material: SS 304	/GVW1	20S9058
Version with connection of the gas pre-heater to "BB" valve and to gas inlet	/GVW	20S9062
Version with steam heating, without controller and valves instead of thermostat	/D	20S9033

Novapress® is a registered trademark for elastomer-bonded gasket material produced by Frenzelit GmbH.

* only SP2500-H

M&C TechGroup Germany GmbH • Rehhecke 79 • 40885 Ratingen • Germany
info@mc-techgroup.com • www.mc-techgroup.com • P. +49 2102 . 935 - 0
Technical specifications and illustrations are without obligation, subject to modifications. 12.22 - 1.00.02

SP2500-H

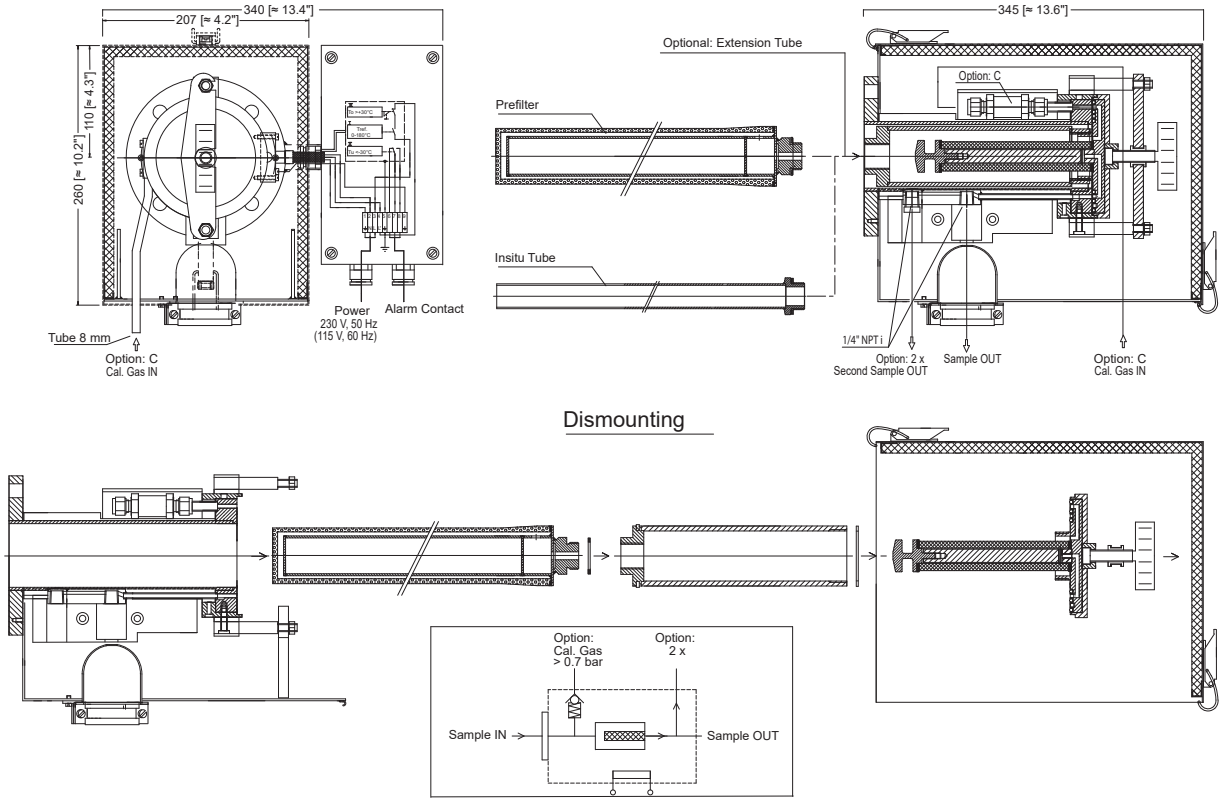

Dimensions in mm [Inches]

SP2500-H/C/I/BB

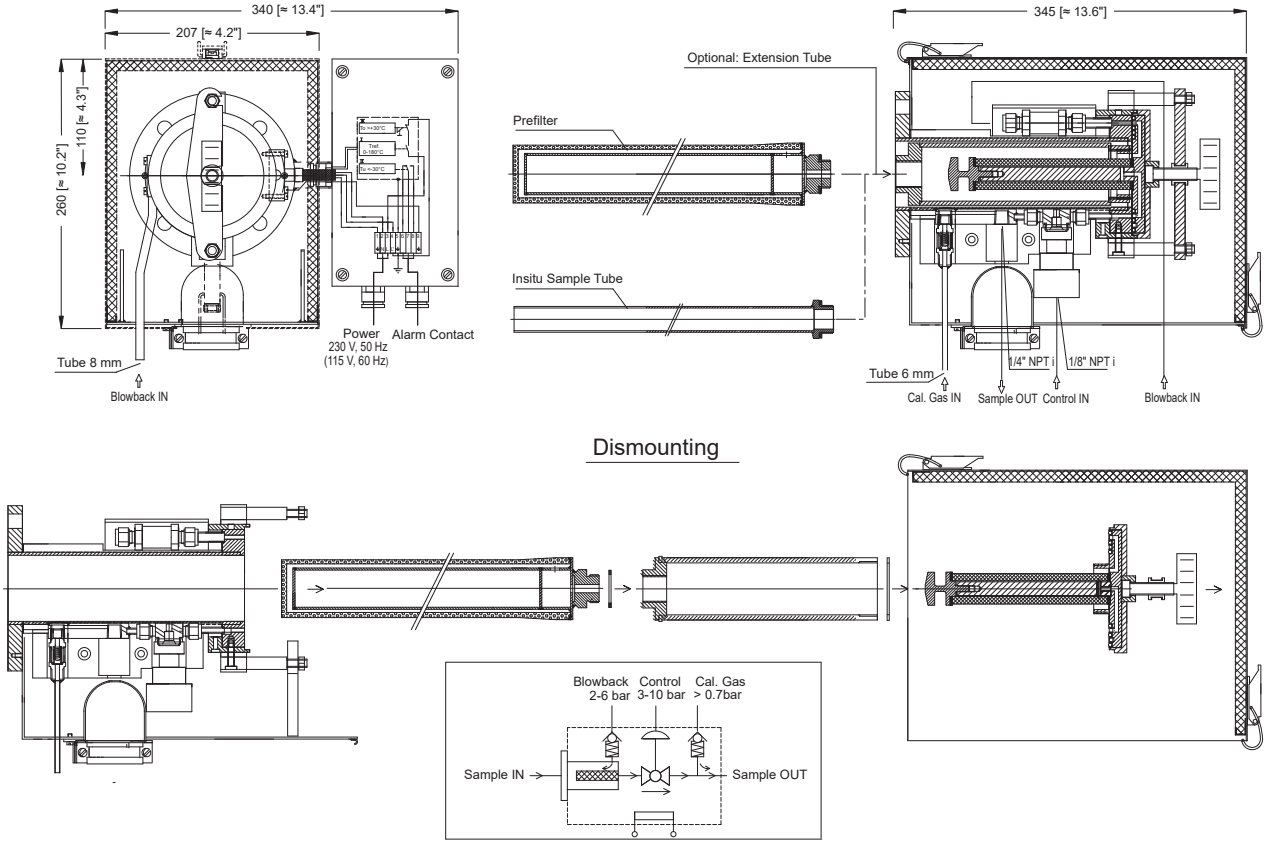

Dimensions in mm [Inches]

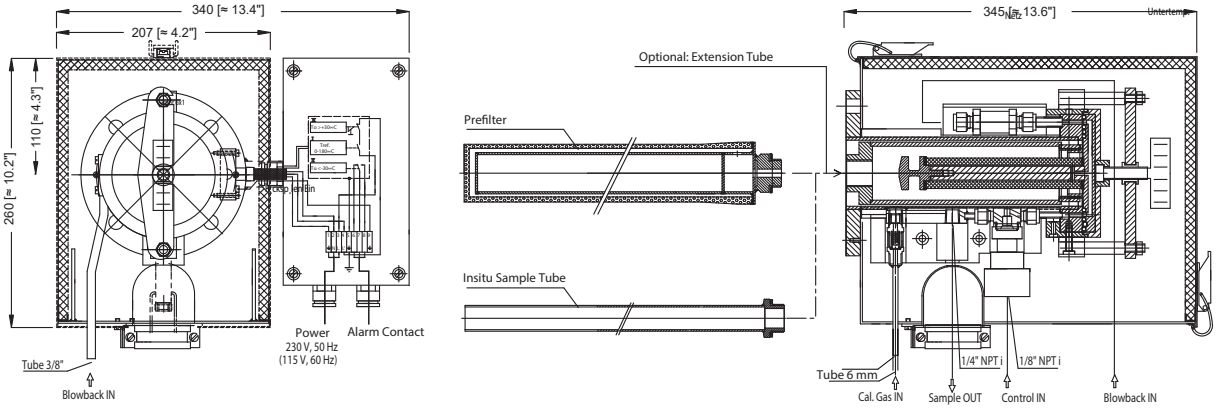

Dismounting

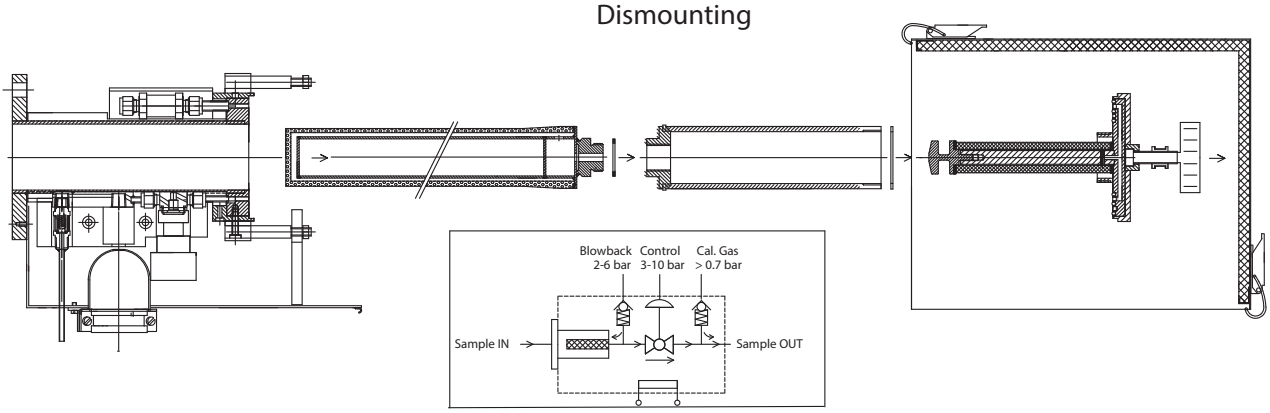

Dimensions in mm [Inches]

M&C TechGroup Germany GmbH • Rehhecke 79 • 40885 Ratingen • Germany
info@mc-techgroup.com • www.mc-techgroup.com • P. +49 2102 . 935 - 0

Technical specifications and illustrations are without obligation, subject to modifications. 12.22 - 1.00.02

SP2600-H/C/I/BB-F/1K190

Gas Sample Probe Series SP®

Versions SP2600-H/C/I/BB-F/1K190 and SP2600-H/C/I/BB-F/0,1GF190, electrically heated

Special Features

- **Filter element with particularly large filter surface**
- **Reliable Operation**
- **Universal applicability**
- **Adaptation to nearly all process conditions due to its compact and modular design**
- **Easy installation and maintenance**
- **Low dead volume**
- **Patented design**
- **Integrated possibility for blowback and shutting off the sample gas outlet**

Application

The probes M&C type SP2600-H/C/I/BB-F, based on type SP2000-H (for more information see SP2000-H data sheet), are used for continuous gas sampling in processes with high dust levels, high temperatures and/or high humidity.

Due to the particularly large filter surface and the blowback possibility for the filter element, this type of probes achieves a very long service life especially in those cases where pre-filters cannot be used. For this purpose, a check valve for blowback and a pneumatic isolation valve for the sample gas outlet are already integrated into the probe.

Version SP2600-H/C/I/BB-F/0,1GF is suitable for dusts with extremely fine particles of up to 0.1 µm grain size. Version SP2600-H/C/I/BB-F/1K190 can be purged back very efficiently due to its double-ply filter element with an outer filter membrane of 1 µm porosity.

Description

The sample probes are designed for easy installation, reliable operation, trouble-free maintenance and a variety of applications. Depending on the application, different sample tubes (see data sheets for sample tubes with G 3/4" connection thread and "Electrically Heated Sample Probe Tube Series SP® Versions SP30-H, SP30-H1.1-V, SP35-H") that are not included in the scope of delivery of the probe, are screwed into the thread (G 3/4" i) of the filter housing.

The large-surface filter element made of ceramic or glass fiber is placed in a housing with low dead volume outside the process area.

The probes are designed in such a way that changing the filter element does not require the sample line to be dismounted and therefore, a contamination of the clean gas is avoided.

The special design of the heating element of the SP2600 (with weather protection cover) permits controlled heating of the complete filter housing including the mounting flange up to 180 °C [356 °F]. This ensures reliable operation outside the process and preventing the temperature from falling below the dew point.

In the standard version, the temperature is controlled by an integrated capillary sensor thermostat with high-temperature limiter and low-temperature alarm function in a compact arrangement directly at the probe. Feeding calibration gas is possible via an integrated check valve.

Additional functions of the probe SP2600-H/C/I/BB-F:

- Calibration gas is injected into the probe through a check valve /C directly to the sample outlet. No calibration gas is lost into the stack.
- An isolation valve /I shuts off the sample outlet from the internal filter chamber.
- With a high flow rate check valve / BB-F, which is fixed to the heated filter housing wall, blowback of the integrated filter element including the filter chamber and the sample tube or the pre-filter is carried out.

Technical Data

Gas Sample Probe Version	SP2600-H/C/I/BB-F/0,1GF190	SP2600-H/C/I/BB-F/1K190
Part No.	20S3550	20S3540
Integrated blowback	Via filter element	
Weather protection cover	Yes	
Terminal box	IP54 EN60529	
Filter housing material	Stainless steeel 316/316Ti*	
Sealing materials	FKM*	
Probe flange sealing material	Novapress®	
Sample tube/pre-filter	Optional	
Sampling pressure max.	0.4 to 6 bar* abs.	
Ambient temperature	-20 to +60 °C*** [-4 to 140 °F*] /PT100, /Fe-CuNi, /Ni-CrNi** = -20 to +80 °C [-4 to 176 °F]	
Filter chamber volume	280 cm^3	
Filter element porosity	0.1 µm	1µm
Thermostat, temperature adjustment	0 to 180 °C* [32 to 356 °F*] /PT100** /Fe-CuNi** /Ni-CrNi**	
Ready for operation	After 40 min	
Low-temperature alarm contact	Change-over contact, contact rating: 250 V, 3 A~, 0.25 A = Alarm point: ΔT 30 °C	
Sample gas outlet connection	1 x 1/4" NPTi* tube connectors ø 6, 8 or 10 mm**	
Blowback/test gas connection	Blowback: tube Ø 8 mm, test gas: tube Ø 6 mm	
Shut-off valve connection /I	1/8" NPT i	
Pressure range contol air /I	3 to 10 bar	
Power supply	230 V, 50/60 Hz, 800 W /115 V** = 115 V, 60 Hz, 800 W (fuse protection 10 A)	
Electrical connections	Terminals max. 4 mm^2, 2 x PG 13.5 cable gland	
Electrical equipment standard	EN 61010, EN 60519-1	
Mounting flange	DN 65 PN 6-B, SS 316Ti* > DN or ANSI possible**	
Weight	19 kg* [≈ 42 lbs]	

* Standard
** Options
*** In case of higher ambient temperatures, use option PT100 (Part No. 20S9025) or thermocouple Fe-CuNi and Ni-CrNi, respectively (Part No. 20S9027 or 20S9028) instead of the thermostat controller. Then, an additional electronic temperature controller (see data sheet "Microprocessor-Controlled Temperature Controller Type 70304") is necessary.
Novapress® is a registered trademark for elastomer-bonded gasket material used by Frenzelit GmbH, Germany.

Differential Pressure and T_{90} Time

ΔP and T90 at a flow rate of:	100	200	500	1000	1500	Nl/h
ΔP with new filter element S-1K190/0,1GF190	0.007	0.011	0.02	0.035	0.040	bar
T90 time for SP2600-H without sample tube	8	5.5	3	1	< 0.5	s

Please note: Nl/h and Nl/min refer to the German standard DIN 1343 and are based on these standard conditions: 0 °C [32 °F], 1013 mbar.

Versions and Options (Extract)

Options (Extract)	Version	Part No.
Version with power supply 115 V/60 Hz	/115 V	20S9030
Version with second outlet for sample gas 1/4" NPT i*	/2 x*	20S9015
Version with with PT00 sensor instead of the thermostat, without temperature controller	/PT100	20S9025
Version with thermocouple FE-CuNi (type J) instead of thermostat, without temperature controller	/Fe-CuN	20S9027
Version with thermocouple Ni-CrNi (type K) instead of thermostat, without temperature controller	/Ni-CrNi	20S9028
Version with second PT100 sensor	/2-PT100	20S9026
Version with special adapter flange size DN...PN 6 or ANSI...150 lbs	/DN	20S9004
Version with gas pre-heater GVW1, material: SS 304	/GVW1	20S9058
Version with connection of the gas pre-heater to valve "BB" and to gas inlet	/GVW	20S9062
Version with steam heating, without controller and valves, instead of the thermostat	/D	20S9033

M&C TechGroup Germany GmbH • Rehhecke 79 • 40885 Ratingen • Germany
info@mc-techgroup.com • www.mc-techgroup.com • P. +49 2102 . 935 - 0
Technical specifications and illustrations are without obligation, subject to modifications. 07.24 - 1.00.02

SP2600-H/C/I/BB-F/0,1GF190

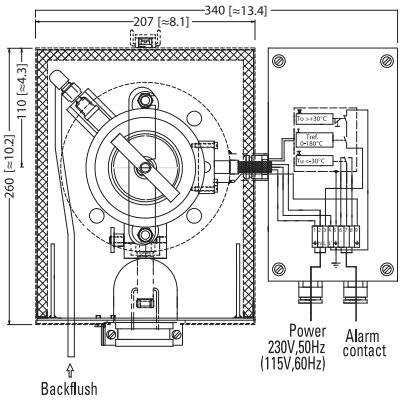

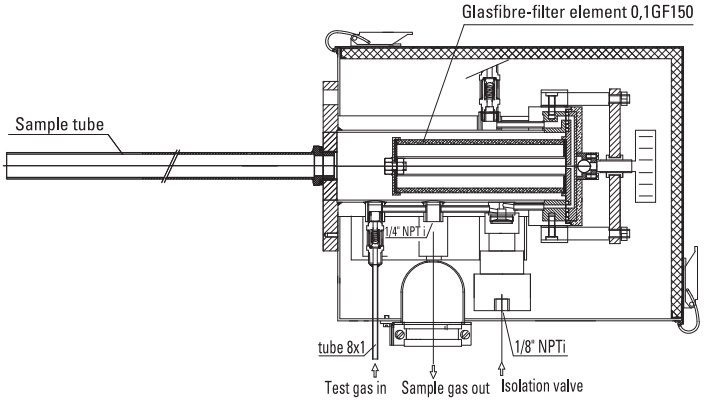

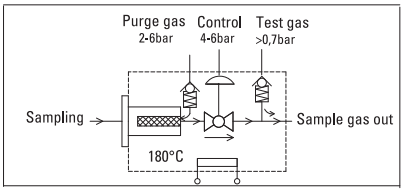

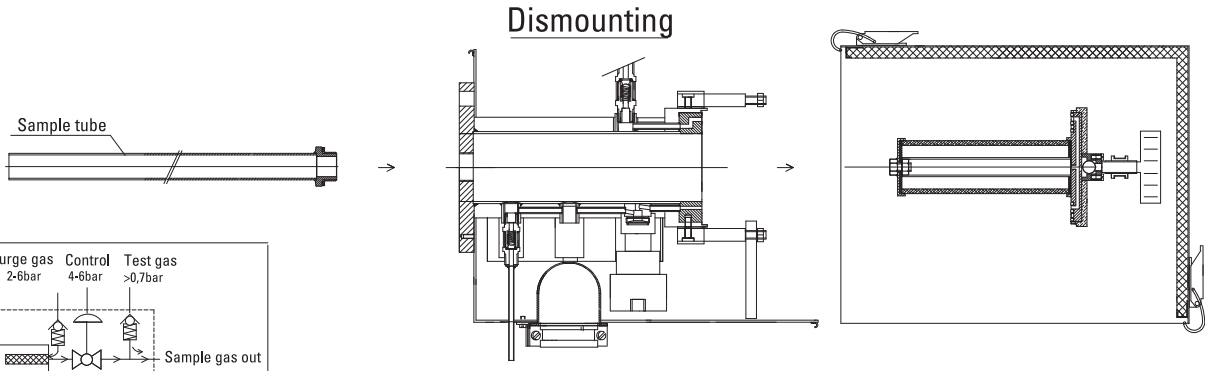

Dimensions in mm [inches]

SP2600-H/C/I/BB-F/1K190

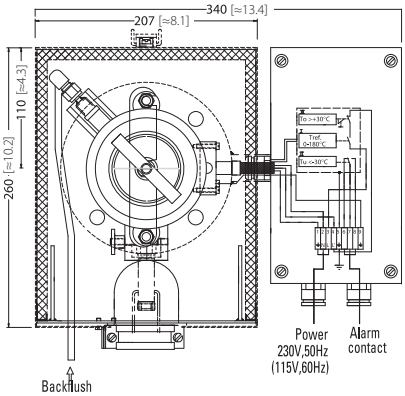

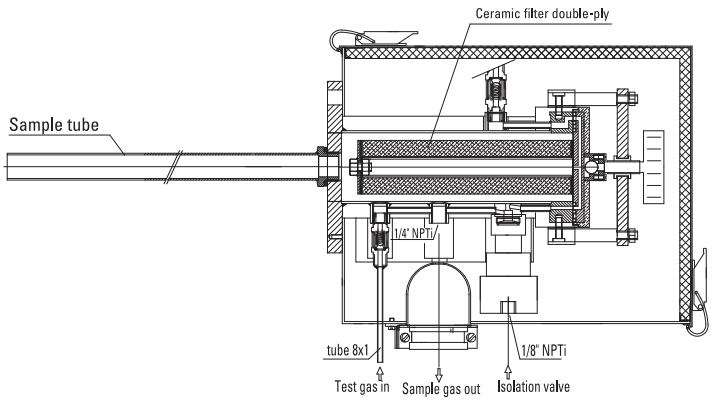

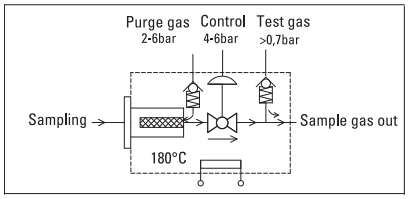

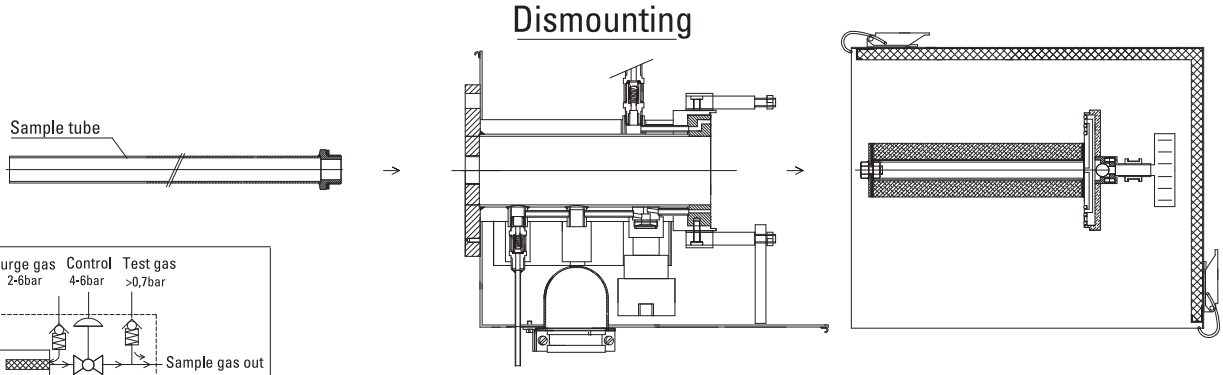

Dimensions in mm [inch]

SP3000V/RS/HEX4-135 resp. 180

Gas Sample Probe Series SP®

Version SP3000 for sampling from zones with explosive dust

Special Features

- **Approval according to ATEX for sampling from Ex zones 20, 21 and 22**
- **Approval according to ATEX for mounting in Ex zones 1, 2 or 21, 22**
- **High operational reliability**
- **Universal applicability**
- **Adaptation to nearly all process conditions due to its compact and modular design**
- **Easy installation**
- **Straightforward maintenance**
- **Low internal dead volume**

Application

The M&C sample probes version SP3000 are used for continuous extraction of explosive gases (Ex zones 20, 21 and 22) from dust-loaded, high temperature and/or humid processes. The probes can be mounted in Ex zones 1, 2 or 21, 22.

Description

The sample probes are designed for easy installation, reliable operation and straightforward maintenance. They are versatile in application and depending on the task to be performed, various pre-filters series V12/V20 with integrated volume displacer and optionally with extension tubes, not included in the scope of delivery, can be simply screwed into the mounting flange (G 3/4") of the basic probe. These process-internal M&C pre-filters are necessary for a valid Ex approval of the M&C probes type SP3000. The sample gas flow rate has to be observed externally for fault monitoring of the pre-filter.

The probe-internal M&C stainless steel filter element with a large surface and high capacity is located in the external housing. The design offers little or no stagnant space outside the process. The probe housing is covered with a protection shield which is part of the Ex approval.

The probes are designed in such a way that changing the filter element is possible without using tools. In this operation, neither the sample probe tube nor the sample line need to be removed, thus avoiding contamination of the clean gas path and maintaining the integrity of the system.

The special design of the optional heating of the M&C probes version SP3000 permits controlled heating of the complete filter housing, including the mounting flange. This ensures reliable operation outside the process preventing the temperature from falling below the dew point.

The temperature of the M&C probes version SP3000 is controlled by a self-regulating heater version HEX4-135 or HEX4-180 for Ex zones 1 and 21, temperature class T4 and T3, respectively and for gas sampling from zones 0, 1 or 2. In dependence of the ambient temperature and the heater version, the min. temperature in the probe is 90 °C [194 °F] or 120 °C [248 °F]. The max. temperature is 120 °C [248 °F] or 160 °C [320 °F].

For back-purging the M&C pre-filter, the option RS is available with mounted buffer vessel triggered by an explosion-proof solenoid valve. With the mounted option for back-purging type RS, gas can be sampled from zones 20, 21 and 22. The back-purging pressure has to be monitored externally and has to be at least 1 bar higher than the process pressure. For the pressure control while back-purging, a corresponding special valve is mounted in the sample gas outlet. Thus, an additional solenoid valve to shut off the sample gas outlet is not necessary. The back-purging inlet is shut off by a check valve.

When sampling from Ex zones, back purging is only allowed with a gas suitable for the sampling point.

M&C TechGroup Germany GmbH • Rehhecke 79 • 40885 Ratingen • Germany
info@mc-techgroup.com • www.mc-techgroup.com • P. +49 2102 . 935 - 0

Gas sample probe type	SP3000	
Part No.	20S5500	
Weather protection shield	Yes	
Filter housing material	Stainless steel 316/316Ti	
Sealing materials	Graphite	
Probe flange sealing material	Graphite	
Pre-filter	Optionally, for a valid Ex approval according to ATEX, the probe SP3000 has to be operated with a pre-filter listed on page 4	
Sample pressure max.	0.5 to 6 bar abs.	
Ambient temperature	-20 to +60 °C [-4 to +140 °F] depending on option selected	
Permissible process gas temperature	Depending on the temperature class, however max. 200 °C [392 °F] at the probe inlet	
Filter chamber volume	120 cm^3	
Filter element, porosity	F-3SS150 = stainless steel*, 3 µm S-2K150 = ceramic**, 2 µm	
Sample gas outlet connection	1x 1/4" NPT i for max. 8 mm tube connectors	
Connection gas outlet at option RS	6 mm Swagelok connector	
Mounting flange	DN 65 PN 6, FormB, SS316Ti* > DN or ANSI possible**	
Weight	7 kg [≈ 15.4 lbs]	
Marking	Ex II 1D/2GD -20°C ≤ Ta ≤ +60°C EXAM BVS 04 ATEX H 045X	
Marking with option RS	Ex II 1D/2GD -20°C ≤ Ta ≤ +60°C EXAM BVS 04 ATEX H 045X	
Option back purge unit type RS	**RS**	
Part No.	20S5560 (a)	
Power supply	230 V 50/60 Hz 9 W or 115 V 50/60 Hz 9 W (a)	
Electrical connection	Cable 3 x 1 mm^2	
Marking	Ex II 2GD Ex m II 135°C, in combination with SP3000	
Connection	G 1/2" at the buffer vessel	
Max. back purge pressure	6 bar abs.	
Volume buffer vessel	2 liters	
Ambient temperature	-20 to 55 °C [-4 to +131 °F]	
Option heating type HEX4	**HEX4-135**	**HEX4-180**
Part No.	20S5510	20S5520
Control	Self-regulating	
Power supply	115 V - 230 V 50/60 Hz	
Electrical connection	Cable gland, terminal range 7 to 12 mm, terminals max. 4 mm^2	
Marking	Ex II 2G Ex e mb IIC T4...T3 Gb / Ex II 2D Ex tb IIIC 135°C...180°C Db EXAM BVS 04 ATEX E 253 / IECEx BVS 15.0060	
Power	400 W	
Case protection	IP66; EN 60529	
Max. temperature	120 °C [248 °F]	160 °C [320 °F]
Min. temperature	90 °C [194 °F]	120 °C [248 °F]
Ambient temperature	-20 to +60 °C [-4 to +140 °F]	
Low temperature alarm contact	< 60 °C [140 °F], 1 contact MC-NO, 230 V 1.5A AC, 0.5 A DC	< 100 °C [212 °F], 1 contact MC-NO, 230 V 1.5 A AC, 0.5 A DC
Option 2-way-ball valve in the probe inlet	**/VA**	
Part No.	20S9050	
Operating temperature	-20 up to +185 °C [-4 up to +365 °F]	
Option 2/3-way-ball valve in the probe inlet	**/3VA**	
Part No.	20S9325	
Backflush / Test gas connection	6 mm tube	
Operating temperature	-20 up to +185 °C [-4 up to +365 °F]	
Option pneum. drive for ball valve /VA o. /3VA	**/MS1**	
Part No.	20S9055	
Connection control air	G 1/4" i	
Pressure control air	5 to 10 bar	
Temperature class	T4	
Option second sample gas outlet	**/2x**	
Part No.	20S9015	
Connection	1/4" NPT female	

* Standard, ** optional

M&C TechGroup Germany GmbH • Rehhecke 79 • 40885 Ratingen • Germany
info@mc-techgroup.com • www.mc-techgroup.com • P. +49 2102 . 935 - 0

Technical specifications and illustrations are without obligation, subject to modifications. 12.24 - 1.00.04

Differential pressure and T_{90} time

ΔP and T90 at a flow rate of:	100	200	500	1000	1500	Nl/h
ΔP with new filter element F-3SS150	0.006	0.012	0.040	0.110	0.215	bar
ΔP with new filter element S-2K150	0.003	0.005	0.02	0.058	0.135	bar
T90 time for SP3000 without tube	6	3.5	1	< 0.5	< 0.5	s

Please note: Nl/h and Nl/min refer to the German standard DIN 1343 and are based on these standard conditions: 0 °C [32 °F], 1013 mbar.

Dimensions

SP3000 basic version with option back-purging type RS and heating type HEX4

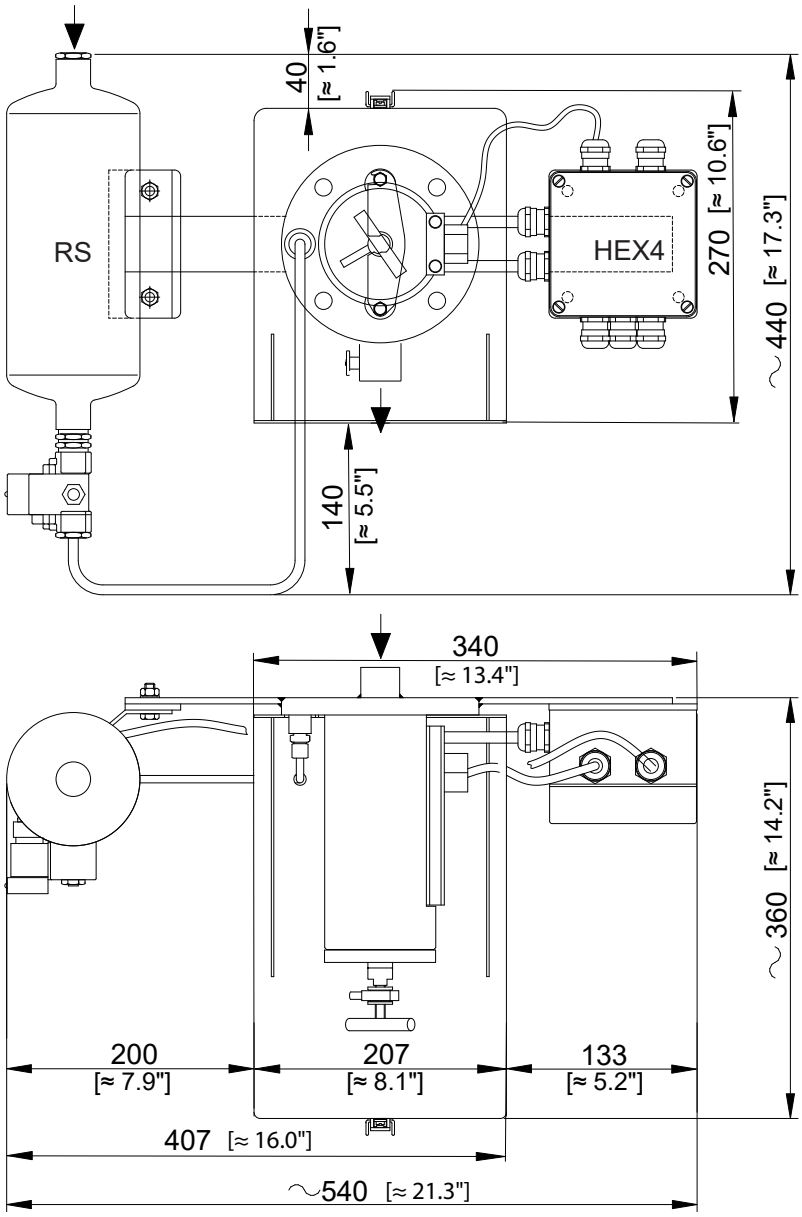

Dimensions in mm [Inches]

Options pre-filters* and extension tubes

Options	Version	Part No.
Pre-filter type V20-0 for SP probes, internal stainless steel filter frit with volume displacer inside, length: 220 mm [≈ 8.7"], 51 mm OD, filter porosity: 2 µm, temperature: max. 600 °C [1112 °F], connection: G 3/4", material: SS 316L and 316Ti	V20-0	20S9105
Pre-filter type V20-0/HC for SP probes, internal Hastelloy filter frit with volume displacer inside, length: 220 mm [≈ 8.7"], 51 mm OD, filter porosity: 2 µm, temperature: max. 900 °C [1652 °F], connection: G 3/4", material: Hastelloy X	V20-0/HC	20S9115
Pre-filter type V20-1 for SP probes, internal stainless steel filter frit with volume displacer inside, length: 520 mm [≈ 20.5"], 60 mm OD, filter porosity: 2 µm, temperature: max. 600 °C [1112 °F], connection: G 3/4", material: SS 316L and 316Ti	V20-1	20S9145
Pre-filter type V20-1/HC for SP probes, internal Hastelloy filter frit with volume displacer inside, length: 520 mm [≈ 20.5"], 60 mm OD, filter porosity: 2 µm, temperature: max. 900 °C [1652 °F], connection: G 3/4", material: Hastelloy-X	V20-1/HC	20S9155
Pre-filter type V20-1/HC for SP probes, internal Hastelloy filter frit with volume displacer inside, length: 520 mm [≈ 20.5"], 60 mm OD, filter porosity: 0.5 µm, temperature: max. 900 °C [1652 °F], connection: G 3/4", material: Hastelloy-C	V20-1/HC	20S9156
Pre-filter type V20-3 for SP probes, internal stainless steel filter frit with volume displacer inside, length: 300 mm [≈ 11.8"], 31 mm OD, filter porosity: 2 µm, temperature: max. 600 °C [1112 °F], connection: G 3/4", material: SS 316L/316Ti	V20-3	20S9300
Extra charge for extension of in-situ stainless steel filter frit V20-3 or V20-4 for each 100 mm [≈ 3.9"] additional length (from standard length 300 mm [≈ 11.8"] to .... mm), max. 1000 mm [~3.3 ft] total filter length, material: SS 316L/316Ti	V20-3	20S9310
Pre-filter type V20-T for SP probes, backflushable internal hose pre-filter with support tube, length: 400 mm [≈ 15.8"], 40 mm OD, filter porosity: 3 µm, temperature: max. 200 °C [392 °F], connection: G 3/4", material: PTFE, SS 316Ti	V20-T	20S9315
Extension tube Vm 500 mm for pre-filters at SP probes, with G 3/4" male connection and internal volume displacer, length: 500 mm [≈ 19.7"], incl. gasket set, sampling temperature: max. 600 °C [1112 °F], material: SS 316 Ti (for pre-filters V20)	Vm500	20S9165
Extension tube Vm1000 mm for pre-filters at SP probes, with G 3/4" male connection and internal volume displacer, length: 1000 mm [≈ 3.3 ft], incl. gasket set, sampling temperature: max. 600 °C [1112 °F] , material: SS 316 (for pre-filters V20)	Vm1000	20S9170
Extension tube Vm1500 mm for pre-filters at SP probes with G 3/4" male connection and internal volume displacer, length: 1500 mm [≈ 4.9 ft], incl. gasket set, temperature: max. 600 °C [1112 °F], material: SS 316Ti (for pre-filters V20)	Vm1500	20S9175

* For a valid Ex approval according to ATEX, the probe SP3000 is to be operated with one of the pre-filters listed above
For choosing the adequate pre-filter, see also data sheet "Pre-Filters for Gas Sample Probes Series SP®, Version SP2000/V20 with G 3/4" connection, SP2000/V12 with flange connection, Version SP2000/20SS 150 with tube connection"

Temperature classes for sampling from Ex zones 20, 21 or 22

Type	Possible Options	Marking	Temperature class	Max. process gas temp. °C at probe inlet		Max. surface temperature °C	
SP3000		Ex II 1 D / 2 GD	T6	≤ 80	[≤ 176 °F]	80	[176 °F]
SP3000		Ex II 1 D / 2 GD	T5	≤ 95	[≤ 203 °F]	95	[203 °F]
SP3000	/RS, /HEX4-135	Ex II 1 D / 2 GD	T4	≤ 130	[≤ 266 °F]	135	[266 °F]
SP3000	/RS, /HEX4-180	Ex II 1 D / 2 GD	T3	≤ 195	[≤ 383 °F]	195	[383 °F]
SP3000	/RS	Ex II 1 D / 2 GD	T2	≤ 200	[≤ 392 °F]	200	[392 °F]

M&C TechGroup Germany GmbH • Rehhecke 79 • 40885 Ratingen • Germany
info@mc-techgroup.com • www.mc-techgroup.com • P. +49 2102 . 935 - 0
Technical specifications and illustrations are without obligation, subject to modifications. 12.24 - 1.00.04

SP3100V/RS/HEX4-135 resp. 180

Gas Sample Probe Series SP®

Versions SP3100V and SP3100 for sampling from zones with explosive gas

Special Features

- **Approval according to ATEX for sampling from Ex zones 0, 1 and 2**
- **Approval according to ATEX for mounting in Ex zones 1, 2 or 21, 22**
- **High operational reliability**
- **Universal applicability**
- **Adaption to nearly all process conditions due to its compact and modular design**
- **Easy installation**
- **User-friendly maintenance**
- **Low internal dead volume**

Application

The M&C sample probes version SP3100V and version SP3100 are used for continuous sampling of explosive gases (Ex zones 0, 1 and 2) from dust-loaded, high temperature and/or humid processes. The probes can be mounted in Ex zones 1, 2, 21 and 22. The two versions only differ in the sealing material of the filter housing. Version SP3100V has a sealing out of FKM for probe types which are heated up to max.185 °C [365 °F] and version SP3100 has a sealing out of graphite for all probe versions heated up to more than 185 °C [365 °F].

Description

The sample probes are designed for easy installation, reliable operation and user-friendly maintenance. They are versatile in application and depending on the task to be performed, various pre-filters series V12 or V20 with integrated volume displacer, optionally with extension tubes, not included in the scope of delivery, can be simply screwed into the mounting flange (G 3/4") of the basic probe. The sample gas flow rate has to be observed externally for fault monitoring.

This M&C stainless steel or ceramic in-depth filter element with a large surface and high capacity is located in a housing with low internal dead volume outside the process chamber. The probe housing is covered with a protection shield which is part of the Ex approval.

The probes are designed in such a way that changing the filter element is possible without using tools. In this operation, neither the sample probe tube nor the sample line need to be removed, thus avoiding contamination of the clean gas path and maintaining the integrity of the system.

The special design of the optional heating of the M&C probes version SP3100(V) permits controlled heating of the complete filter housing, including the mounting flange. This ensures reliable operation outside the process preventing the temperature from falling below the dew-point.

The optional temperature control of the M&C probes version SP3100(V) can be implemented by three different heater types.

The first possibility is a self-regulating heater version HEX4-135 or HEX4-180 for Ex zones 1 and 21, for gas sampling from zones 0, 1 or 2. In dependence on the ambient temperature and the heater type, the min. temperature in the probe is 90 °C [194 °F] or 120 °C [248 °F]. The max. temperature is 120 °C [248 °F] or 160 °C [320 °F].

The second possibility is a controlled heating version HEX1-3 for Ex zone 1, adjustable up to 180 °C [356 °F] and for sampling from Ex zones 1 or 2. The controller has to be mounted outside the Ex zone.

The third possibility is a controlled heating version HEX1-1 for Ex zone 1, adjustable up to 180 °C [356 °F] and for sampling from Ex zone 1 or 2. The controller can be mounted inside the Ex zone.

For back-purging the M&C pre-filter, the option RS is available with mounted buffer vessel triggered by an explosion-proof solenoid valve. With the mounted option for back-purging type RS, gas can be sampled from zones 1 and 2. The back-purge pressure has to be monitored externally and must be at least 1 bar higher than the process pressure. For the pressure control while back-purging, a corresponding special valve is mounted in the sample gas outlet. Thus, an additional solenoid valve to shut off the sample gas outlet is not necessary. The back purge inlet is shut off by a check valve.

When sampling from Ex zones, back-purging is only allowed with a gas suitable for the sampling point!

M&C TechGroup Germany GmbH • Rehhecke 79 • 40885 Ratingen • Germany
info@mc-techgroup.com • www.mc-techgroup.com • P. +49 2102 . 935 - 0

Technical Data

Gas sample probe type	SP3100V (up to 185 °C) [up to 365 °F]	SP3100 (more than 185 °C) [more than 365 °F]
Part No.	20S5605	20S5600
Weather protection cover	Yes	
Filter housing material	Stainless steel 316/316Ti	
Sealing materials	Graphite, FKM	Graphite
Probe flange sealing material	Graphite	
Pre-filter/sample tubes	Optionally, see data sheets for pre-filter and sample tubes	
Sample pressure max.	0.5 to 6 bar abs	
Ambient temperature	-20 to +60 °C [-4 to +140 °F]	
Permissible process gas temperature	Depending on the temperature class, however, max. 200 °C [392 °F] at the probe inlet	
Filter chamber volume	120 cm^3	
Filter element, porosity	F-3SS150 = stainless steel*, 3 µm S-2K150 = ceramic**, 2 µm	
Sample gas outlet connection	1 x 1/4" NPTi for max. 8 mm tube connectors	
Connection gas outlet with option RS	6 mm Swagelok connector	
Mounting flange	DN 65 PN 6, FormB, SS316Ti* > DN or ANSI possible**	
Weight	7 kg [≈ 15.4 lbs]	
Marking	Ex II 1G/2GD -20°C ≤ Ta ≤ +60°C EXAM BVS 04 ATEX H 045X	
Marking with option RSand/or HEX1	Ex II 2G/2GD -20°C ≤ Ta ≤ +60°C EXAM BVS 04 ATEX H 045X	
Option back-purging unit type /RS	**/RS**	
Part No.	20S5560(a)	
Power supply	230 V, 50/60 Hz, 9 W or 115 V, 50/60 Hz, 9 W (a)	
Electrical connection	Cable 3 x 1 mm^2	
Marking	Ex II 2GD Ex m II 135°C, in combination with SP3100(V)	
Connection	G 1/2" at the buffer vessel	
Max. back-purge pressure	6 bar abs	
Volume buffer vessel	2 liters	
Ambient temperature	-20 to 60 °C [-4 to +140 °F]	
Option heating type HEX4	**HEX4-135**	**HEX4-180**
Part No.	20S5510	20S5520
Mounting of controller	In Ex zones 1, 2, 21, and 22	
Control	Self-regulating	
Power supply	115 V - 230 V 50/60 Hz	
Electrical connection	Cable gland, terminal range 7 to 12 mm, terminals max. 4 mm^2	
Marking	Ex II 2G Ex e mb IIC T4..T3 Gb / Ex II 2D Ex tb IIIC 135°C...180°C Db EXAM BVS 04 ATEX E 253 / IECEx BVS 15.0060	
Case protection	IP66; EN 60529	
Power	400 W	
Max. temperature	120 °C [248 °F]	160 °C [320 °F]
Min. temperature	90 °C [194 °F]	120 °C [248 °F]
Ambient temperature	-20 to +60 °C [-4 to +140 °F]	
Low temperature alarm contact	< 60 °C [140 °F], 1 contact MC-NO, 230 V, 1.5A AC, 0.5 A DC	< 100 °C [212 °F], 1 contact MC-NO, 230 V, 1.5 A AC, 0.5 A DC
Option heating type HEX1	**HEX1-3**	
Part No.	20S9037 (a)	
Mounting of controller	Outside the Ex zone	
Control	Electronic	
Power supply	230 V, 50/60 Hz or 115 V, 50/60 Hz (a)	
Electrical connection	3 x 1.5 mm^2	
Marking	Ex II 2G Ex de ib IIC T3*, other temperature classes on request	
Power	400 W	
Case protection	IP54, EN 60529	
Temperature	0 to 180 °C [32 to 356 °F] T3 or 0 to 135 °C [32 to 275 °F] T4	
Ambient temperature	-20 to +40 °C [-4 to +104 °F]	
Low temperature alarm contact	< 120 °C [< 248 °F], 1 change-over contact, 230 V, 1.5 A AC, 0.5 A DC	

* Standard, ** optionally

M&C TechGroup Germany GmbH • Rehhecke 79 • 40885 Ratingen • Germany
info@mc-techgroup.com • www.mc-techgroup.com • P. +49 2102 . 935 - 0
Technical specifications and illustrations are without obligation, subject to modifications. 12.24 - 1.00.03

Technical Data

Gas sample probe type	SP3100V (up to 185 °C) [up to 365 °F]	SP3100 (more than 185 °C) [more than 365 °F]
Option heating type HEX1	**HEX1-1**	
Part No.	20S9038(a)	
Mounting controller	Inside Ex zones 1, 2	
Control	Electronic	
Power supply	230 V 50/60 Hz or 115 V 50/60 Hz (a)	
Electrical connection	3 x 1.5 mm^2	
Marking	Ex II 2G Ex de ib IIC T3*, other temperature classes on request	
Power	400 W	
Case protection	IP54; EN 60529	
Temperature	0 to 180 °C [32 to 356 °F] T3 or 0 to 135 °C [32 to 275 °F] T4	
Ambient temperature	-20 to +40 °C [-4 to +104 °F]	
Low temperature alarm contact	< 120 °C [< 248 °F], 1 change-over contact, 230 V 1.5 A AC, 0.5 A DC	
Option 2-way-ball valve in the probe inlet	**/VA**	
Part No.	20S9050	
Operating temperature	-20 up to +185 °C [-4 up to +365 °F]	
Option 2/3-way-ball valve in the probe inlet	**/3VA**	
Part No.	20S9325	
Backflush/test gas connection	6 mm tube	
Operating temperature	-20 up to +185 °C [-4 up to +365 °F]	
Option pneum. drive for ball valve /VA or /3VA	**/MS1**	
Part No.	20S9055	
Connection control air	G 1/4" i	
Pressure control air	5 to10 bar	
Temperature class	T4	
Option second sample gas outlet	**/2x**	
Part No.	20S9015	
Connection	1/4" NPT i	
Option spun-glass cartridge	**/FW**	
Part No.	20S9047	20S9046
Material	SS 316Ti, Novapress®	SS 316Ti, Graphite

* Standard
** optionally

Differential pressure and T_{90} time

ΔP and T90 at a flow rate of:	100	200	500	1000	1500	Nl/h
ΔP with new filter element F-3SS150	0.006	0.012	0.040	0.110	0.215	bar
ΔP with new filter element S-2K150	0.003	0.005	0.02	0.058	0.135	bar
T90 time for SP3100 without tube	6	3.5	1	< 0.5	< 0.5	s

Novapress® is a registered trademark for elastomer-bonded gasket material by Frenzelit GmbH, Germany.

Please note: Nl/h and Nl/min refer to the German standard DIN 1343 and are based on these standard conditions: 0 °C [32 °F], 1013 mbar.

Dimensions

SP3110(V) basic version with option back-purging type RS and heating type HEX4

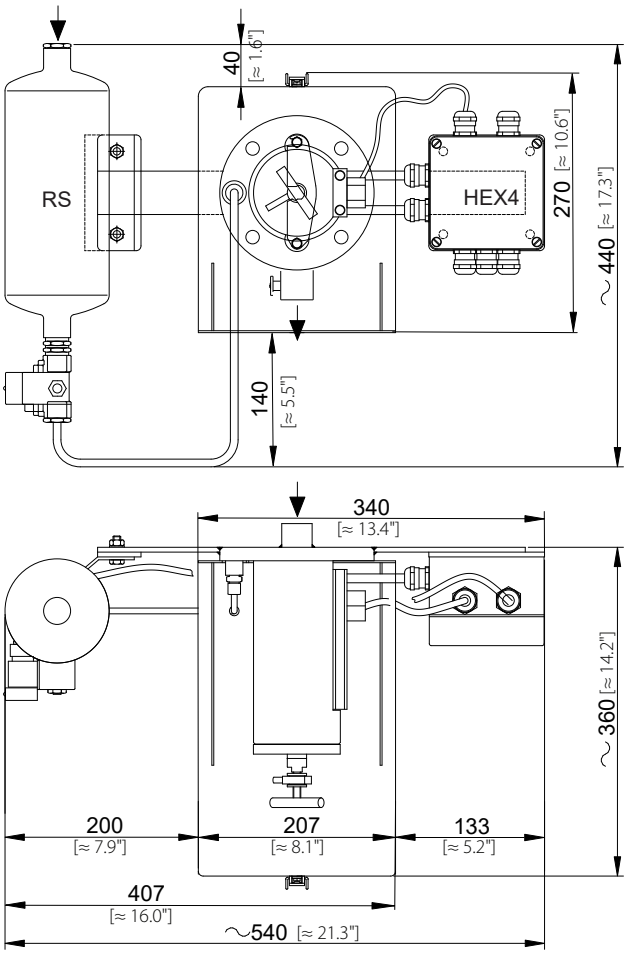

Dimensions in mm [Inches]

Option heating HEX1-1

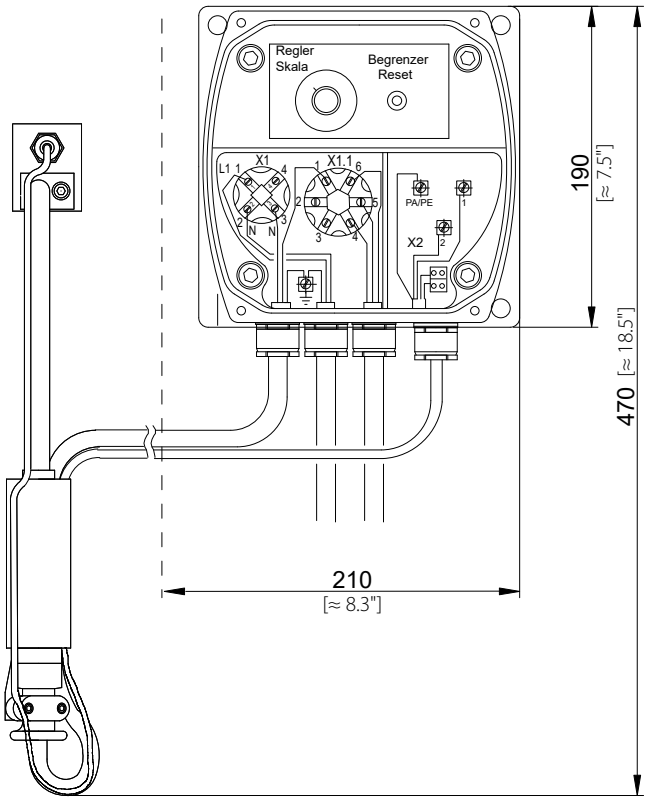

Dimensions in mm [Inches]

M&C TechGroup Germany GmbH • Rehhecke 79 • 40885 Ratingen • Germany
info@mc-techgroup.com • www.mc-techgroup.com • P. +49 2102 . 935 - 0

Technical specifications and illustrations are without obligation, subject to modifications. 12.24 - 1.00.03

Option heating HEX1-3

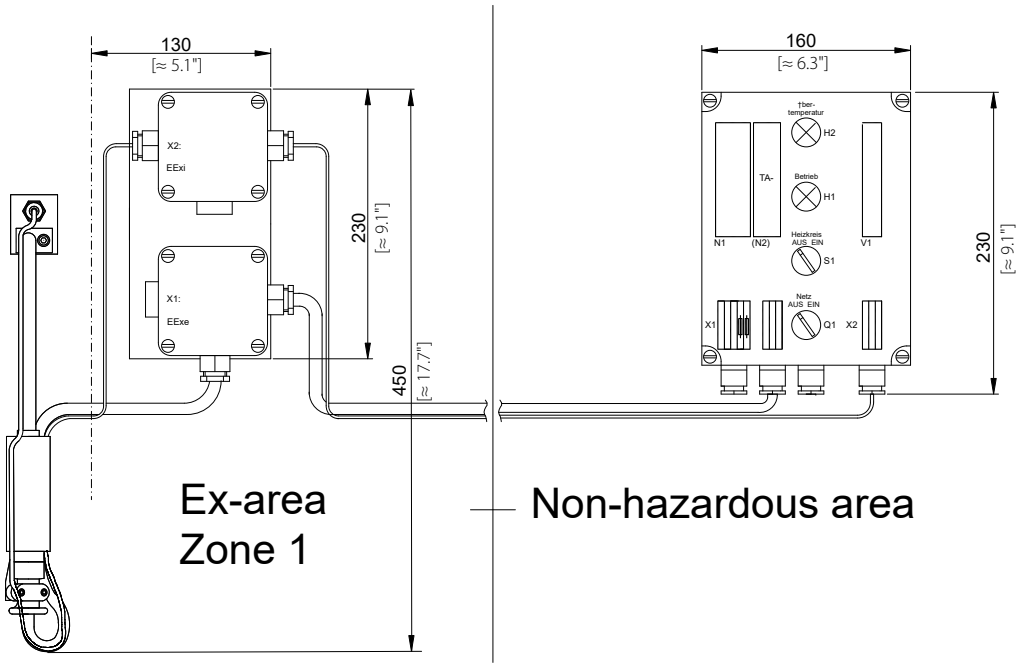

Dimensions in mm [Inches]

Options pre-filters and extension tubes

Options	Version	Part No.
Pre-filter type V20-0 for SP probes, internal stainless steel filter frit with volume displacer inside, length: 220 mm [≈ 8.7"], 51 mm OD, filter porosity: 2 µm, temperature: max. 600 °C [1112 °F], connection: G 3/4", material: SS 316L/316Ti	V20-0	20S9105
Pre-filter type V20-0/HC for SP probes, internal Hastelloy filter frit with volume displacer inside, length: 220 mm [≈ 8.7"], 51 mm OD, filter porosity: 2 µm, temperature: max. 900 °C [1652 °F], connection: G 3/4", material: Hastelloy X	V20-0/HC	20S9115
Pre-filter type V20-1 for SP probes, internal stainless steel filter frit with volume displacer inside, length: 520 mm [≈ 20.5"], 60 mm OD, filter porosity: 2 µm, temperature: max. 600 °C [1112 °F], connection: G 3/4", material: SS 316L/316Ti	V20-1	20S9145
Pre-filter type V20-1/HC for SP probes, internal Hastelloy filter frit with volume displacer inside, length: 520 mm [≈ 20.5"], 60 mm OD, filter porosity: 2 µm, temperature: max. 900 °C [1652 °F], connection: G 3/4", material: Hastelloy-X	V20-1/HC	20S9155
Pre-filter type V20-1/HC for SP probes, internal Hastelloy filter frit with volume displacer inside, length: 520 mm [≈ 20.5"], 60 mm OD, filter porosity: 0.5 µm, temperature: max. 900 °C [1652 °F], connection: G 3/4", material: Hastelloy-C	V20-1/HC	20S9156
Pre-filter type V20-3 for SP probes, internal stainless steel filter frit with volume displacer inside, length: 300 mm [≈ 11.8"], 31 mm OD, filter porosity: 2 µm, temperature: max. 600 °C [1112 °F], connection: G 3/4", material: SS 316L/316Ti	V20-3	20S9300
Extra charge for extension of in-situ stainless steel filter frit V20-3 or V20-4 for each 100 mm [≈ 3.9"] additional length (from standard length 300 mm [≈ 11.8"] to .... mm), max. 1000 mm [~3.3 ft] total filter length, material: SS 316L/316Ti	V20-3	20S9310
Pre-filter type V20-T for SP probes, backflushable internal hose pre-filter with support tube, length: 400 mm [≈ 15.8"], 40 mm OD, filter porosity: 3 µm, temperature: max. 200 °C [392 °F], connection: G 3/4", material: PTFE, SS 316Ti	V20-T	20S9315
Extension tube Vm 500 mm for pre-filters at SP probes, with G 3/4" male connection and internal volume displacer, length: 500 mm [≈ 19.7"], incl. gasket set, sampling temperature: max. 600 °C [1112 °F], material: SS 316 Ti (for pre-filters V20)	Vm500	20S9165
Extension tube Vm1000 mm for pre-filters at SP probes, with G 3/4" male connection and internal volume displacer, length: 1000 mm [≈ 3.3 ft], incl. gasket set, sampling temperature: max. 600 °C [1112 °F] , material: SS 316 (for pre-filters V20)	Vm1000	20S9170
Extension tube Vm1500 mm for pre-filters at SP probes with G 3/4" male connection and internal volume displacer, length: 1500 mm [≈ 4.9 ft], incl. gasket set, temperature: max. 600 °C [1112 °F], material: SS 316Ti (for pre-filters V20)	Vm1500	20S9175

For choosing the adequate pre-filter, see also data sheet "Pre-Filters for Gas Sample Probes Series SP®, Version SP2000/V20 with G 3/4" connection, SP2000/V12 with flange connection, Version SP2000/20SS 150 with tube connection"

Options sample tubes

Options	Version	Part No.
In-situ probe tube SP 2000/SS, length: 1 m [≈ 3.3 ft], connection: G 3/4" male, temperature: max. 600 °C [1112 °F], material: SS 316Ti	SP2000/SS	20S9065
In-situ probe tube SP 2000/SS-Vm, length: 1 m [≈ 3.3 ft], with volume displacer, connection: G 3/4" male, temperature: max. 600 °C [1112 °F], material: SS 316Ti	SP2000/SS-Vm	20S9067
In-situ probe tube SP 2000/HC, length: 1 m [≈ 3.3 ft], connection: G 3/4" male, temperature: max.: 900 °C [1652 °F], material: Hastelloy-C	SP2000/HC	20S9090
In-situ probe tube SP2000/KA, length: 1 m [≈ 3.3 ft], connection: G 3/4" male, temperature: max. 1300 °C [2372 °F], material: Kanthal	SP2000/KA	20S9080
In-situ probe tube SP2000/IN, length: 1 m [≈ 3.3 ft], connection G 3/4" male, temperature: max. 1100 °C [2012 °F], material: Inconel	SP2000/IN	20S9077
In-situ probe tube SP2000/HR, length: 1 m [≈ 3.3 ft], connection G 3/4" male, temperature: max. 1200 °C [2192 °F], material: Alloy HR160	SP2000/HR160	20S9103

For choosing the adequate sample tube, see also data sheet "Sample Tubes for Gas Sample Probes Series SP® with G 3/4" connection thread"

Temperature classes for sampling from Ex zone 0

Type	Possible Options	Marking	Temperature class	Max. process gas temp. in °C at the probe inlet		Max. surface temperature in °C	
SP3100V		Ex II 1 G / 2 GD	T6	≤ 68	[≤ 154.4 °F]	68	[154.4 °F]
SP3100V		Ex II 1 G / 2 GD	T5	≤ 80	[≤ 176 °F]	80	[176 °F]
SP3100V		Ex II 1 G / 2 GD	T4	≤ 108	[≤ 226.4 °F]	108	[226.4 °F]
SP3100V	/HEX4	Ex II 1 G / 2 GD	T3	≤ 160	[≤ 320 °F]	160	[320 °F]
SP3100		Ex II 1 G / 2 GD	T2	≤ 200	[≤ 392 °F]	200	[392 °F]

Temperature classes for sampling from Ex zone 1 or 2

Type	Possible Options	Marking	Temperature class	Max. process gas temp. in °C at the probe inlet		Max. surface temperature in °C	
SP3100V		Ex II 1 G / 2 GD	T6	≤ 80	[≤ 176 °F]	80	[176 °F]
SP3100V		Ex II 1 G / 2 GD	T5	≤ 95	[≤ 203 °F]	95	[203 °F]
SP3100V	/RS, /HEX4-135	Ex II 1 G / 2 GD	T4	≤ 130	[≤ 266 °F]	135	[266 °F]
SP3100	/HEX4-180	Ex II 1 G / 2 GD	T3	≤ 195	[≤ 383 °F]	195	[383 °F]
SP3100	/RS, HEX1	Ex II 2 G / 2 GD	T3	≤ 195	[≤ 383 °F]	195	[383 °F]
SP3100	/RS	Ex II 2 G / 2 GD	T2	≤ 200	[≤ 392 °F]	200	[392 °F]

M&C TechGroup Germany GmbH • Rehhecke 79 • 40885 Ratingen • Germany
info@mc-techgroup.com • www.mc-techgroup.com • P. +49 2102 . 935 - 0
Technical specifications and illustrations are without obligation, subject to modifications. 12.24 - 1.00.03

SP3110V/RS/HEX4-135 resp. 180

Gas Sample Probe Series SP®

Versions SP3110V and SP3110 for sampling from zones with explosive gas, featuring different options for calibration gas feeding, back-purging and shutting off

Special Features

- **Approval according to ATEX for sampling from Ex zones 1 and 2**
- **Approval according to ATEX for mounting in Ex zones 1, 2 or 21, 22**
- **Different options for test gas feeding, back-purging and shutting off**
- **High operational reliability**
- **Universal applicability**
- **Adaption to nearly all process conditions due to its compact and modular design**
- **Easy installation**
- **User-friendly maintenance**
- **Low internal dead volume**

Application

The M&C sample probes version SP3110V and version SP3110 are used for continuous sampling of explosive gases (Ex zones 1 and 2) from dust-loaded, high temperature and/or humid processes. The probes can be mounted in Ex zones 1, 2 or 21, 22. The two versions only differ in the sealing material of the filter housing. Version SP3110V has a sealing out of FKM for probe types which are heated up to max. 185 °C [max. 365 °F] and version SP3110 has a sealing out of graphite for all versions heated up to more than 185 °C [365 °F].

Description

The sample probes are designed for easy installation, reliable operation and user-friendly maintenance. They are versatile in application and depending on the task to be performed, various sample tubes and pre-filters series V12 or V20 with integrated volume displacer, optionally with extension tubes, not included in the scale of delivery, can be simply screwed into the mounting flange (G 3/4") of the basic probe. The sample gas flow rate has to be observed externally for fault monitoring.

The M&C stainless steel or ceramic in-depth filter element with a large surface and high capacity is located in a housing with low internal dead volume outside the process chamber. The probe housing is covered with a protection shield which is part of the Ex approval.

The probes are designed in such a way that changing the filter element is possible without using tools. In this operation, neither the sample probe tube nor the sample line need to be removed, thus avoiding contamination of the clean gas path and maintaining the integrity of the system.

The special design of the optional heating of the M&C probes version SP3110(V) permits controlled heating of the complete filter housing, including the mounting flange. This ensures reliable operation outside the process preventing the temperature from falling below the dew point.

The temperature control of the M&C probes version SP3110(V) can be ensured by three different heater types.

The first possibility is a self-regulating heater version HEX4-135 or HEX4-180 for Ex zone 1 or 21 and for gas sampling from Ex zone 1 or 2. Depending on the ambient temperature and the heater type, the min. temperature in the probe is 90 °C [194 °F] or 120 °C [248 °F], the max. temperature is 120 °C [248 °F] or 160 °C [320 °F].

The second possibility is a controlled heating version HEX1-3 for Ex zone 1, adjustable up to 180 °C [356 °F] and for sampling from Ex zones 1 or 2. The controller has to be mounted outside the Ex zone.

The third possibility is a controlled heating version HEX1-1 for Ex zone 1, adjustable up to 180 °C [356 °F] and for sampling from Ex zone 1 or 2. The controller can be mounted inside the Ex zone.

For calibration gas feeding or back-purging, different options are possible: for example, the option RS with mounted buffer vessel triggered by an explosion-proof solenoid valve is available. With the mounted option for back-purging type RS, gas can be sampled from zones 1 and 2. The back-purge pressure has to be monitored externally and must be at least 1 bar higher than the process pressure. For the pressure control while back-purging, a corresponding special valve is mounted in the sample gas outlet. Thus, an additional solenoid valve to shut off the sample gas outlet is not necessary. The back-purge inlet is shut off by a check valve.

When sampling from Ex zones, back-purging is only allowed with a gas suitable for the sampling point.

M&C TechGroup Germany GmbH • Rehhecke 79 • 40885 Ratingen • Germany
info@mc-techgroup.com • www.mc-techgroup.com • P. +49 2102 . 935 - 0

Technical Data

Gas sample probe type	SP3110V (up to 185 °C [365 °F])	SP3110 (more than 185 °C [365 °F])
Part No.	20S5615	20S5610
Weather protection shield	Yes	
Filter housing material	Stainless steel 316/316Ti	
Sealing materials	Graphite, FKM	Graphite
Probe flange sealing material	Graphite	
Pre-filter/sample tubes	Optional, see data sheets for pre-filters and sample tubes	
Sample pressure max.	0.5 to 6 bar abs.	
Ambient temperature	-20 to +60 °C [-4 to +140 °F] depending on option selected	
Permissible process gas temperature	Depending on the temperature class, however max. 200 [392 °F] at the probe inlet	
Filter chamber volume	120 cm^3 [≈ 7.3 in^3]	
Filter element, porosity	F-3SS150= stainless steel*, 3 µm S-2K150= ceramic**, 2 µm	
Sample gas outlet connection	1 x 1/4" NPT female for max. 8 mm tube connectors	
Connection gas outlet with option RS	6 mm Swagelok connector	
Mounting flange	DN 65 PN 6, FormB, SS 316Ti* > DN or ANSI possible**	
Weight	7 kg [≈ 15.4 lbs]	
Marking	Ex II 2G/2GD -20°C ≤ Ta ≤ +60°C	

Option heating type HEX4	HEX4-135	HEX4-180
Part No.	20S5510	20S5520
Mounting of controller	In Ex zones 1, 2, 21 and 22	
Control	Self-regulating	
Power supply	115 V - 230 V, 50/60 Hz	
Electrical connection	Cable gland, terminal range 7 to 12 mm, terminals max. 4 mm^2	
Marking	Ex II 2G Ex e mb IIC T4..T3 Gb / Ex II 2D Ex tb IIIC 135°C...180°C Db EXAM BVS 04 ATEX E 253 / IECEx BVS 15.0060	
Case protection	IP66; EN 60529	
Power	400 W	
Max. temperature	120 °C [248 °F]	160 °C [320 °F]
Min. temperature	90 °C [194 °F]	120 °C [248 °F]
Ambient temperature	-20 to +60 °C [-4 to +140 °F]	
Low temperature alarm contact	< 60 °C [140 °F], 1 contact MC-NO, 230 V 1.5 A AC, 0.5 A DC	< 100 °C [212 °F], 1 contact MC-NO, 230 V 1.5 A AC, 0.5 A DC

Option heating type HEX1	HEX1-3
Part No.	20S9037(a)
Mounting of controller	Outside the Ex zone
Control	Electronic
Power supply	230 V, 50/60 Hz and for Part No. 20S9037a: 115 V, 50/60 Hz
Electrical connection	3 x 1.5mm^2
Marking	Ex II 2G Ex de ib IIC T3*, others on request
Power	400 W
Case protection	IP54; EN 60529
Temperature	0 to 180 °C [32 to 356 °F] T3 or 0 to 135 °C [32 to 275 °F] T4
Ambient temperature	-20 to +40 °C [-4 °F to +104 °F]
Low temperature alarm contact	< 120 °C [< 248 °F], 1 change-over contact, 230 V 1.5 A AC, 0.5 A DC

Option heating type HEX1	HEX1-1
Part No.	20S9038(a)
Mounting of controller	Inside Ex zone 1, 2
Control	Electronic
Power supply	230 V/50 Hz and for Part No. 20S9038a: 115 V/60 Hz
Electrical connection	3 x 1.5 mm^2
Marking	Ex II 2G Ex de ib IIC T3*, others on request
Power	400 W
Case protection	IP54; EN 60529
Temperature	0 to 180 °C [32 to 356 °F] T3
Ambient temperature	-20 to +40 °C [-4 to +104 °F]
Low temperature alarm contact	< 120 °C [< 248 °F], 1 change-over contact, 230 V 1.5 A AC, 0.5 A DC

* Standard
** optional

M&C TechGroup Germany GmbH • Rehhecke 79 • 40885 Ratingen • Germany
info@mc-techgroup.com • www.mc-techgroup.com • P. +49 2102 . 935 - 0
Technical specifications and illustrations are without obligation, subject to modifications. 12.24 - 1.01.04

Technical Data

Gas sample probe type	SP3110V (up to 185 °C[365 °F])	SP3110 (more than 185 °C [365 °F])
Option back-purge unit type /RS	/RS	
Part No.	20S5560(a)	
Power supply	230 V 50/60 Hz 9 W and for Part No. 20S5560a: 115 V 50/60 Hz 9 W	
Electrical connection	Cable 3 x 1mm²	
Marking	Ex II 2GD Ex m II 135°C, in combination with SP3110(V)	
Connection	G 1/2" female at the buffer vessel	
Max. backpurge pressure	6 bar abs.	
Volume buffer vessel	2 liters	
Ambient temperature	-20 to 55 °C [-4 to +131 °F]	
Option 2-way-ball valve in the probe inlet	**/VA**	
Part No.	20S9050	
Operating temperature	-20 up to 185°C [-4 up to +365 °F]	
Option 2/3-way-ball valve in the probe inlet	**/3VA**	
Part No.	20S9325	
Backflush test gas connection	6 mm tube	
Operating temperature	-20 to +185 °C [-4 up to +365 °F]	
Option pneum. drive for ball valve /VA or /3VA	**/MS1**	
Part No.	20S9055	
Connection control air	G 1/4" female	
Pressure control air	5 to 10 bar	
Option valve for blowback or calibration gas 1/4"	**/R**	
Part No.	20S9045	
Opening pressure	> 0.7 bar	
Connection	6 mm tube	
Maximum blowback pressure	6 bar abs.	
Maximum operating temperature	+185 °C [+365 °F]	
Option high-performance blowback valve	**/BB**	**/BB-F**
Part No.	20S9008	20S9006
Way of blowback gas	Via filter chamber	Via probe filter element
Check valve	High-performance check valve 3/8"	
Opening pressure	> 0.7 bar	
Connection	8 mm tube	
Maximum blowback pressure	6 bar abs.	
Maximum operating temperature	+185 °C [+365 °F]	
Option test gas valve/shut-off valve	**/C + /I**	
Part No.	20S9011 and 20S9009	
Way of test gas	Via sample gas outlet with shut-off to the process	
Check valve	Check valve 1/4"	
Opening pessure	> 0.7 bar	
Connection	6 mm tube	
Shut-off valve	Bellow-type valve with pneumatic drive	
Pressure control air	3 to 10 bar	
Connection control air	1/8" NPT female	
Option second sample gas outlet	**/2x**	
Part No.	20S9015	
Connection	1/4" NPT female	
Option spun-glass cartridge	**/FW**	
Part No.	20S9047	20S9046
Material	SS 316Ti, Novapress	SS 316Ti, Graphite

* Standard
** Option

Combinations of options

Option No.	1	2	3	4	5	6a	6b	7	8	9
	/RS	/VA	/3VA	/MS1	/R	/BB	/BB-F	/C/I	/2x	/FW
/RS		X							X	
/VA	X			X	X	X	X	X		X
/3VA				X				X	X	
/MS1		X	X							
/R		X								
/BB		X						X	X	
/BB-F		X						X	X	
/C/I	X	X	X			X	X			X
/2x	X	X	X			X	X			X

X = possible combinations
X = recommended combinations

Differential pressure and T_{90} time

ΔP and T90 at a flow rate of:	100	200	500	1000	1500	Nl/h
ΔP with new filter element F-3SS150	0.006	0.012	0.040	0.110	0.215	bar
ΔP with new filter element S-2K150	0.003	0.005	0.02	0.058	0.135	bar
T90 time for SP3110 without tube	6	3.5	1	< 0.5	< 0.5	s

Please note: Nl/h and Nl/min refer to the German standard DIN 1343 and are based on these standard conditions: 0 °C [32 °F], 1013 mbar.

Dimensions

SP3110(V) basic version with option back-purging type /RS and heating type HEX4

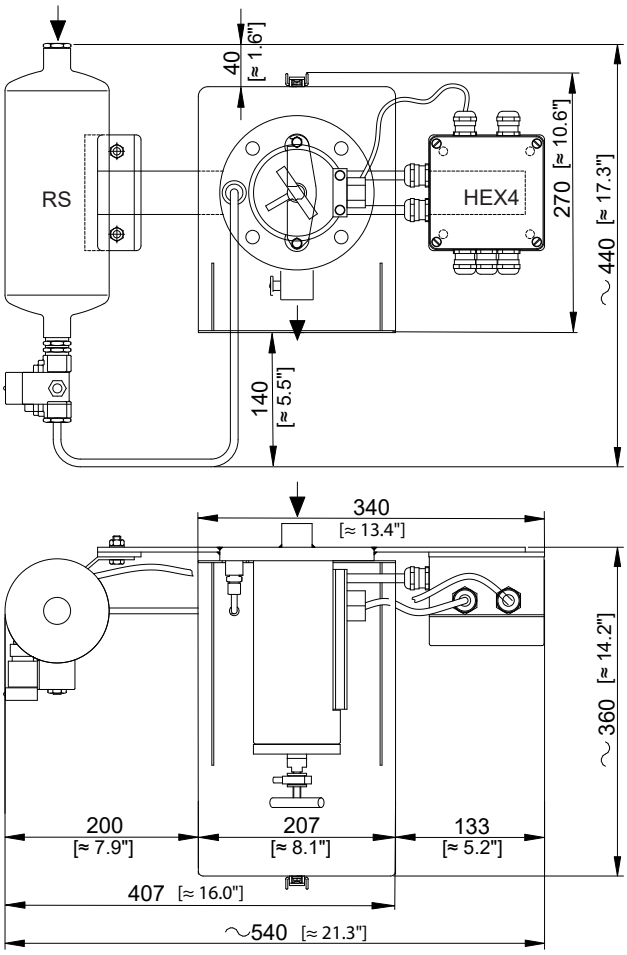

Dimensions in mm [Inches]

M&C TechGroup Germany GmbH • Rehhecke 79 • 40885 Ratingen • Germany
info@mc-techgroup.com • www.mc-techgroup.com • P. +49 2102 . 935 - 0
Technical specifications and illustrations are without obligation, subject to modifications. 12.24 - 1.01.04

Option heating HEX1-1

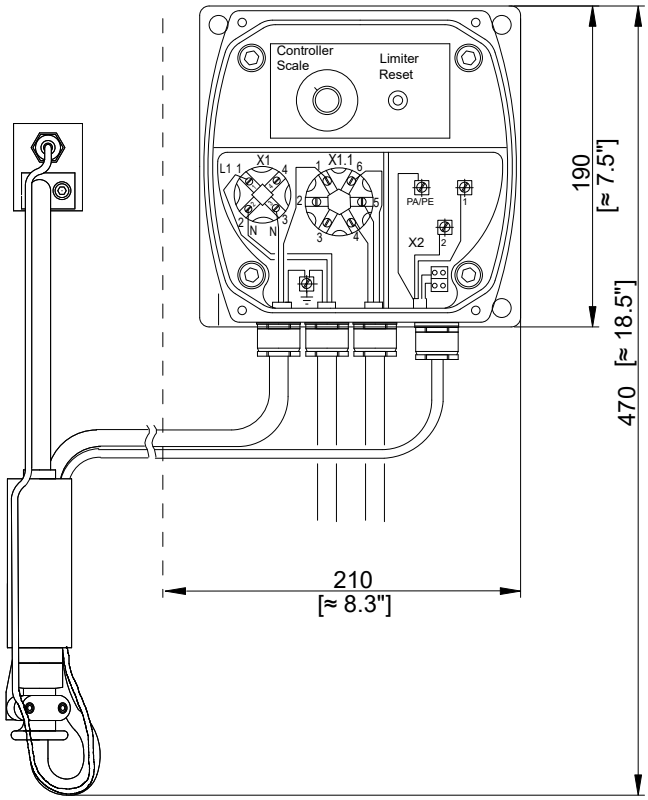

Dimensions in mm [Inches]

Option heating HEX1-3

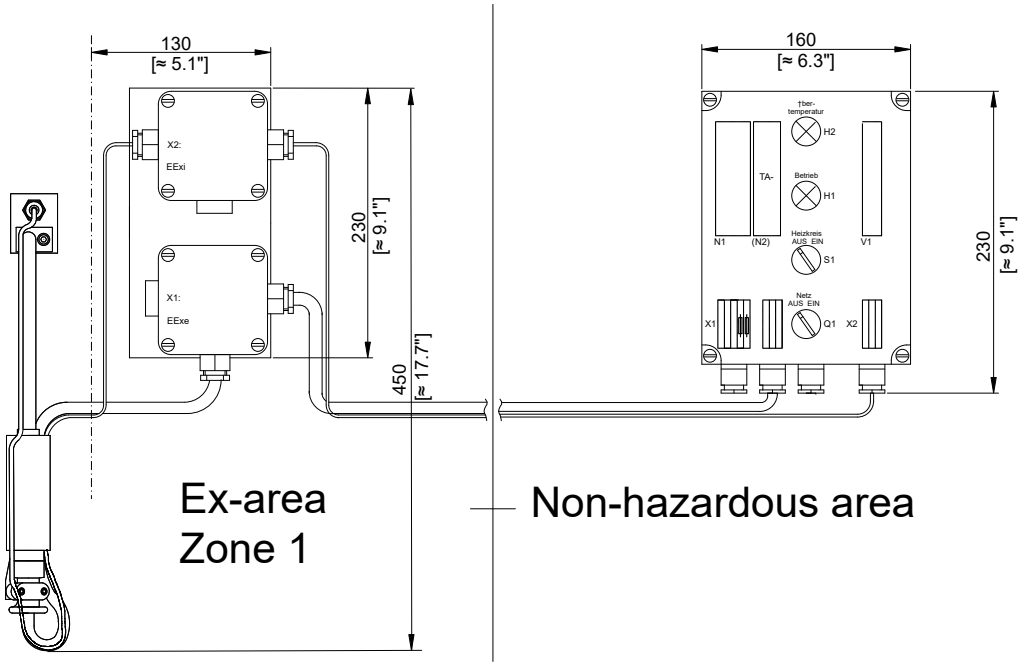

Dimensions in mm [Inches]

Functional diagram of options 1 to 8

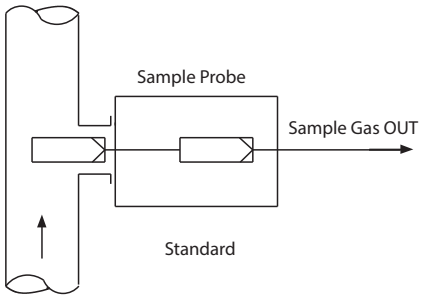

1

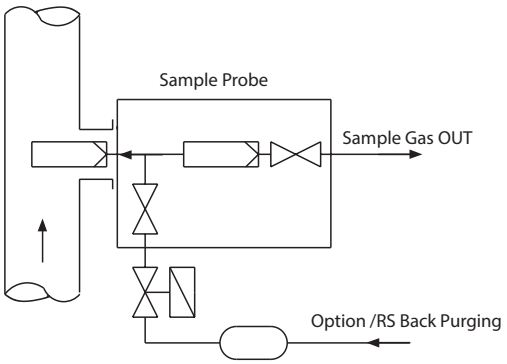

2

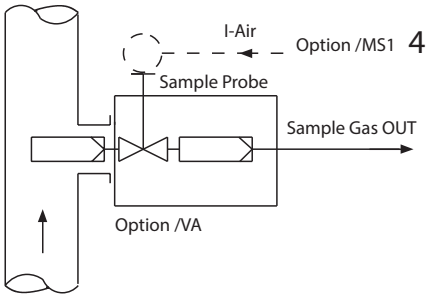

3

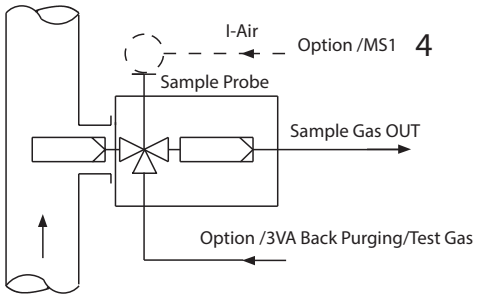

5

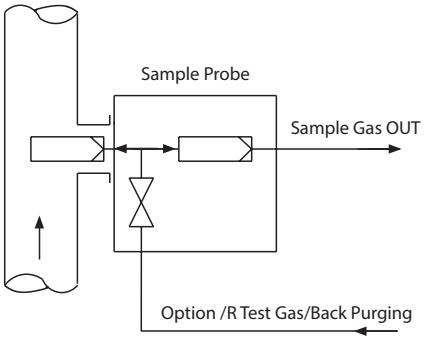

6a

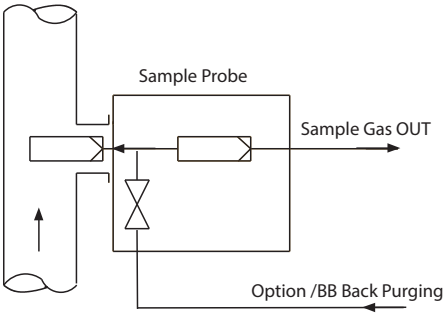

6b

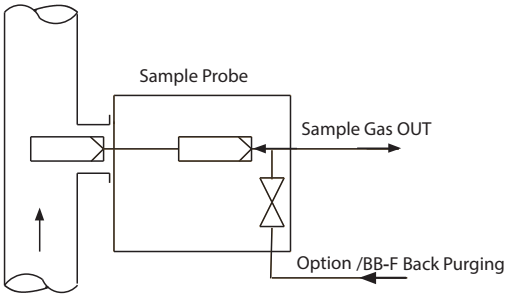

7

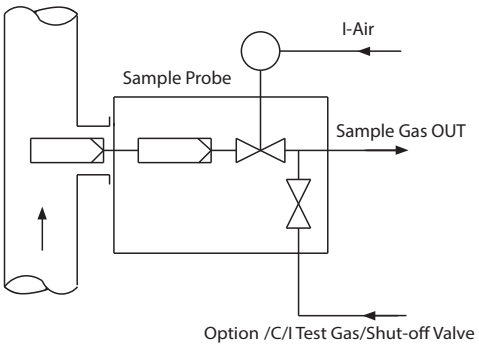

8

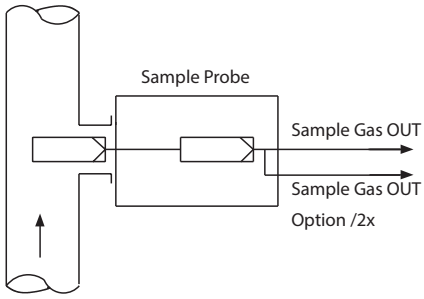

Possible combinations of options, see table page 3.

M&C TechGroup Germany GmbH • Rehhecke 79 • 40885 Ratingen • Germany
info@mc-techgroup.com • www.mc-techgroup.com • P. +49 2102 . 935 - 0

Technical specifications and illustrations are without obligation, subject to modifications. 12.24 - 1.01.04

Options pre-filters and extension tubes

Options	Version	Part No.
Pre-filter type V20-0 for SP probes, internal stainless steel filter frit with volume displacer inside, length: 220 mm [≈ 8.7"], 51 mm OD, filter porosity: 2 µm, temperature: max. 600 °C [1112 °F], connection: G 3/4", material: SS 316L and 316Ti	V20-0	20S9105
Pre-filter type V20-0/HC for SP probes, internal Hastelloy filter frit with volume displacer inside, length: 220 mm [≈ 8.7"], 51 mm OD, filter porosity: 2 µm, temperature: max. 900 °C [1652 °F], connection: G 3/4", material: Hastelloy X	V20-0/HC	20S9115
Pre-filter type V20-1 for SP probes, internal stainless steel filter frit with volume displacer inside, length: 520 mm [≈ 20.5"], 60 mm OD, filter porosity: 2 µm, temperature: max. 600 °C [1112 °F], connection: G 3/4", material: SS 316L and 316Ti	V20-1	20S9145
Pre-filter type V20-1/HC for SP probes, internal Hastelloy filter frit with volume displacer inside, length: 520 mm [≈ 20.5"], 60 mm OD, filter porosity: 2 µm, temperature: max. 900 °C [1652 °F], connection: G 3/4", material: Hastelloy-X	V20-1/HC	20S9155
Pre-filter type V20-1/HC for SP probes, internal Hastelloy filter frit with volume displacer inside, length: 520 mm [≈ 20.5"], 60 mm OD, filter porosity: 0.5 µm, temperature: max. 900 °C [1652 °F], connection: G 3/4", material: Hastelloy-X	V20-1/HC	20S9156
Pre-filter type V20-3 for SP probes, internal stainless steel filter frit with volume displacer inside, length: 300 mm [≈ 11.8"], 31 mm OD, filter porosity: 2 µm, temperature: max. 600 °C [1112 °F], connection: G 3/4", material: SS 316L/316Ti	V20-3	20S9300
Extra charge for extension of in-situ stainless steel filter frit V20-3 or V20-4 for each 100 mm [≈ 3.9"] additional length (from standard length 300 mm [≈ 11.8"] to .... mm), max. 1000 mm [≈ 3.3 ft] total filter length, material: SS 316L/316Ti	V20-3	20S9310
Pre-filter type V20-T for SP probes, backflushable internal hose pre-filter with support tube, length: 400 mm [≈ 15.8"], 40 mm OD, filter porosity: 3 µm, temperature: max. 200 °C [392 °F], connection: G 3/4", material: PTFE, SS 316Ti	V20-T	20S9315
Extension tube Vm 500 mm for pre-filters at SP probes, with G 3/4" male connection and internal volume displacer, length: 500 mm [≈ 19.7"], incl. gasket set, sampling temperature: max. 600 °C [1112 °F], material: SS 316 Ti (for pre-filters V20)	Vm500	20S9165
Extension tube Vm1000 mm for pre-filters at SP probes, with G 3/4" male connection and internal volume displacer, length: 1000 mm [≈ 3.3 ft], incl. gasket set, sampling temperature: max. 600 °C [1112 °F] , material: SS 316 (for pre-filters V20)	Vm1000	20S9170
Extension tube Vm1500 mm for pre-filters at SP probes with G 3/4" male connection and internal volume displacer, length: 1500 mm [≈ 4.9 ft], incl. gasket set, temperature: max. 600 °C [1112 °F], material: SS 316Ti (for pre-filters V20)	Vm1500	20S9175

For choosing the adequate pre-filter, see also data sheet "Pre-Filters for Gas Sample Probes Series SP®, Version SP2000/V20 with G 3/4" connection, SP2000/V12 with flange connection, Version SP2000/20SS 150 with tube connection"

Options sample tubes

Options	Version	Part No.
Sample tube SP 2000/SS, length: 1 m [≈ 3.3 ft], connection: G 3/4" male, temperature: max. 600 °C [1112 °F], material: SS 316Ti	SP2000/SS	20S9065
Sample tube SP 2000/SS-Vm, length: 1 m [≈ 3.3 ft], with volume displacer, connection: G 3/4" male, temperature: max. 600 °C [1112 °F], material: SS 316Ti	SP2000/SS-Vm	20S9067
Sample tube SP 2000/HC, length: 1 m [≈ 3.3 ft], connection: G 3/4" male, temperature: max.: 900 °C [1652 °F], material: Hastelloy-X	SP2000/HC	20S9090
Sample tube SP2000/KA, length: 1 m [≈ 3.3 ft], connection: G 3/4" male, temperature: max. 1300 °C [2372 °F], material: Kanthal	SP2000/KA	20S9080
Sample tube SP2000/IN, length: 1 m [≈ 3.3 ft], connection G 3/4" male, temperature: max. 1100 °C [2012 °F], material: Inconel	SP2000/IN	20S9077
Sample tube SP2000/HR, length: 1 m [≈ 3.3 ft], connection G 3/4" male, temperature: max. 1200 °C [2192 °F], material: Alloy HR160	SP2000/HR160	20S9103

For choosing the adequate sample tube, see also data sheet "Sample Tubes for Gas Sample Probes Series SP® with G 3/4" connection thread"

Temperature classes for sampling from zone 1 or 2

Type	Possible Options*	Marking	Temperature class	Max. process gas temperature at the-probe inlet in °C [°F]		Max. surface temperature in °C [°F]	
SP3110V		Ex II 2 G / 2GD	T6	≤ 80	[≤ 176 °F]	80	[176 °F]
SP3110V		Ex II 2G / 2GD	T5	≤ 95	[≤ 203 °F]	95	[203 °F]
SP3110V	/RS, /HEX4-135	Ex II 2G / 2GD	T4	≤ 130	[≤ 266 °F]	135	[266 °F]
SP3110	/RS, /HEX	Ex II 2G / 2GD	T3	≤ 195	[≤ 383 °F]	195	[383 °F]
SP3110	/RS	Ex II 2G / 2GD	T2	≤ 200	[≤ 392 °F]	200	[392 °F]

* All further options mentioned on pages 2 and 3 can be used additionally in all temperature classes

M&C TechGroup Germany GmbH • Rehhecke 79 • 40885 Ratingen • Germany
info@mc-techgroup.com • www.mc-techgroup.com • P. +49 2102 . 935 - 0

SP3200V/HEX5.1

Gas Sample Probe Series SP®

Versions SP3200V and SP3200 for sampling from Ex zone 2 or 22

Special Features

- **Approval according to ATEX and CSA for sampling from/mounting in Ex zone 2 or 22 and Class I Division 2, respectively**
- **Adaption to nearly all process conditions due to its compact and modular design**
- **Stainless steel filter element, ceramic optionally available**
- **Sealing material for filter housing lid: graphite or Viton®**
- **Easy installation and low maintenance**
- **Low dead volume**
- **Optionally: different valves available for back-purging, test gas feeding or sample gas outlet shut-off**

Application

The M&C sample probes versions SP3200V and SP3200 are used for continuous sampling of explosive gases (Ex zone 2 or 22) from dust-loaded, high temperature and/or humid processes. The probes can be mounted in Ex zone 2 or 22. The two versions only differ in the sealing material of the filter housing. Version SP3200V has a sealing out of FKM for types which are heated up to max. 185 °C [365 °F] and version SP3200 has a sealing out of graphite for all versions heated up to more than 185 °C [365 °F].

Description

The sample probes are designed for easy installation, reliable operation and user-friendly maintenance. They are versatile in application and depending on the task to be performed, various sample tubes and pre-filters series V12 or V20 with integrated volume displacer, optional with extension tubes that are not included in the scope of delivery can be simply screwed into the mounting flange (G 3/4") of the basic probe. The sample gas flow rate has to be observed externally for fault monitoring.

The M&C stainless steel or ceramic in-depth filter element with a large surface and high capacity is located in the external housing with low internal dead volume outside the process. The probe housing is covered with a protection shield which is part of the Ex approval.

The probes are designed in such a way that changing the filter element is possible without using tools. In this operation, neither the sample probe tube nor the sample line need to be removed, thus avoiding contamination of the clean gas path and maintaining the integrity of the system.

The special design of the optional heating of the M&C probes version SP3200(V) permits controlled heating of the complete filter housing, including the mounting flange. This ensures reliable operation preventing the temperature from falling below the dew point outside the process.

For M&C probe version SP3200(V), the heaters version HEX5-1.08 or HEX5-2.08 are available as options (see HEX5 data sheet).

Version HEX5-1.08 has a temperature controller integrated in the connection box of the probe and is suitable for ambient temperatures up to 50 °C [122 °F]. Version HEX 5-2.08 is equipped with a temperature controller in a wall-mount housing to be installed externally. When choosing this combination, the probe can be used at ambient temperatures up to 70 °C [158 °F] and the controller up to 50 °C [122 °F].

The probe can be operated with both heating versions in Ex zone 2 or 22 and Class I Division 2, Groups A/B/C/D, respectively.

For calibration gas feeding or back-purging, different options are possible: for example, the option RS with mounted buffer vessel triggered by an explosion-proof solenoid valve is available. The back-purge pressure has to be monitored externally and must be at least 1 bar higher than the process pressure. For the pressure control while back-purging, a corresponding special valve is mounted in the sample gas outlet. Thus, an additional solenoid valve to shut off the sample gas outlet is not necessary. The back-purge inlet is shut off by a check valve.

When sampling from Ex zones, back-purging is only allowed with a gas suitable for the sampling point.

Technical Data

Gas sample probe type	SP3200V (up to 185 °C [365 °F])	SP3200 (more than 185 °C [365 °F])
Part No.	20S5705	20S5700
Weather protection shield	Yes	
Filter housing material	Stainless steel 316/316Ti	
Sealing materials	Graphite, FKM	Graphite
Probe flange sealing material	Graphite	
Pre-filters/sample tubes	Optional, see data sheets "Sample Tubes for Gas Sample Probes Series SP®" and "Pre-Filters for Gas Sample Probes Series SP®"	
Sample pressure max.	0.5 to 6 bar abs.	
Ambient temperature	-20 to +60 °C [-4 to +140 °F] depending on option selected	
Permissible process gas temperature	Depending on the temperature class, however max. 200 °C [392 °F] at the probe inlet	
Filter chamber volume	120 cm^3	
Filter element, porosity	F-3SS150= stainless steel*, 3 µm; S-2K150= ceramic**, 2 µm	
Sample gas outlet connection	1 x 1/4" NPT i for max. 8 mm tube connectors	
Connection gas outlet with option RS	6 mm Swagelok connector	
Mounting flange	DN 65 PN 6, FormB, SS316Ti* > DN or ANSI possible**	
Weight	7 kg [≈ 15.43 lbs]	
Option heating type HEX5	**HEX5-1.08, internal controller**	**HEX5-2.08, external controller**
Part No.	20S9650(a)	20S9655(a)
Mounting of controller	In Ex zones 2 and 22	
Control	Electronic	
Power supply	240 V 50/60 Hz or 120 V 50/60 Hz (a)	
Electrical connection	Cable gland, terminal range 6 to 12 mm, terminals max. 4 mm^2	
Marking for heater		Ex II 3G Ex ec IIC T5-T2 Gc (see table p. 6), Ex II 3D Ex tc IIIC T75°C - 235°C Dc CSA Class I, Div. 2, Groups A/B/C/D, T5 - T2B
Marking for controller		Ex II 3G Ex ec nC IIC T2-T5 Gc (see table p. 6), Ex II 3D Ex tc IIIC T75°C - 235°C Dc CSA Class I, Div. 2, Groups A/B/C/D, T5 - T2B
Marking for heater with internal controller	Ex II 3G Ex ec nC IIC T5-T2 Gc (see table p. 6), Ex II 3D Ex tc IIIC T75°C - 235°C Dc CSA Class I, Div. 2, Groups A/B/C/D, T5 - T2B	
Power	Max. 800 W (240 V), max. 830 W (120 V)	
Case protection	IP65; EN 60529	
Operating temperature	0 to max. 230 °C [+32 to max. +446 °F] according to temperature class	
Ambient temperature	0 to +50 °C [+32 to +122 °F]	Controller: 0 to +50 °C [+32 to +122 °F], heater: -20 to +70 °C [-4 to +158 °F]
Low temperature alarm contact	-5 °C to T_{SET}, potential-free closing contact with switching capacity 250 V 3 A AC, 0.25 A DC	
Option back-purge unit type /RS	**/RS**	
Part No.	20S5560(a)	
Power supply	230 V 50/60 Hz 9 W or 115 V 50/60 Hz 9 W (a)	
Electrical connection	Cable 3 x 1 mm^2	
Marking	Ex II 3GD T4, in combination with SP3200(V)	
Connection	G 1/2" i at the buffer vessel	
Max. back-purge pressure	6 bar abs.	
Volume buffer vessel	2 liters	
Ambient temperature	-20 to +55 °C [-4 to +131 °F]	
Option 2-way-ball valve in the probe inlet	**/VA**	
Part No.	20S9050	
Operating temperature	-20 up to +185 °C [-4 up to +365 °F]	
Option 2/3-way-ball valve in the probe inlet	**/3VA**	
Part No.	20S9325	
Backflush/test gas connection	6 mm tube	
Operating temperature	-20 up to +185 °C [-4 up to +365 °F]	
Option pneum. drive for ball valve /VA or /3VA	**MS1**	
Part No.	20S9055	
Connection control air	G 1/4" i	
Pressure control air	5 to 10 bar	
Option valve for blowback or calibration gas 1/4"	**/R**	
Part No.	20S9045	
Opening pressure	> 0.7 bar	
Connection	6 mm tube	
Maximum blowback pressure	6 bar abs.	
Maximum operating temperature	+185 [+365 °F]	

* Standard, ** optional

M&C TechGroup Germany GmbH • Rehhecke 79 • 40885 Ratingen • Germany
info@mc-techgroup.com • www.mc-techgroup.com • P. +49 2102 . 935 - 0
Technical specifications and illustrations are without obligation, subject to modifications. 11.24- 1.01.02

Technical Data

Gas sample probe type	SP3200V (up to 185 °C [365 °F])	SP3200 (more than 185 °C [365 °F])
Option high-performance blowback valve	**/BB**	**/BB-F**
Part No.	20S9008	20S9006
Way of blowback gas	Via filter chamber	Via probe filter element
Check valve	High-performance check valve 3/8"	
Opening pressure	> 0.7 bar	
Connection	8 mm tube	
Maximum blowback pressure	6 bar abs.	
Maximum operating temperature	185 °C [365 °F]	
Option test gas valve and shut-off valve	**/C + /I**	
Part No.	20S9011and 20S9009	
Way of test gas	Via sample gas outlet with shut-off to the process	
Check valve	Check valve 1/4"	
Opening pessure	> 0.7 bar	
Connection	6 mm tube	
Shut-off valve	Bellow-type valve with pneumatic drive	
Pressure control air	3 to 10 bar	
Connection control air	1/8" NPT i	
Option second sample gas outlet	**/2X**	
Part No.	20S9015	
Connection	1/4" NPT i	
Option-spun glass cartridge	**/FW**	
Part No.	20S9047	20S9046
Material	SS 316Ti, Novapress®	SS 316Ti, graphite

* Standard, ** Option
Novapress® is a registered trademark for elastomer-bonded gasket material used by the German company Frenzelit GmbH.

Combinations of options

Option No.	1	2	3	4	5	6a	6b	7	8	9
	/RS	/VA	/3VA	/MS1	/R	/BB	/BB-F	/C/I	/2X	/FW
/RS		X						X	X	
/VA	X			**X**	X	X	X	X		X
/3VA				**X**				X	X	
/MS1		**X**	**X**							
/R		X								
/BB		X						**X**	X	
/BB-F		X						**X**	X	
/C/I	X	X	X			**X**	**X**			X
/2X	X	X	X			X	X			X

X = possible combinations
X = recommended combinations

Differential pressure and T_{90} time

ΔP and T90 at a flow rate of:	100	200	500	1000	1500	Nl/h
ΔP with new filter element F-3SS150	0.006	0.012	0.040	0.110	0.215	bar
ΔP with new filter element S-2K150	0.003	0.005	0.02	0.058	0.135	bar
T90 time for SP3200 without tube	6	3.5	1	< 0.5	< 0.5	s

Please note: Nl/h and Nl/min refer to the German standard DIN 1343 and are based on these standard conditions: 0 °C [32 °F], 1013 mbar.

Functional diagram of options 1 to 8

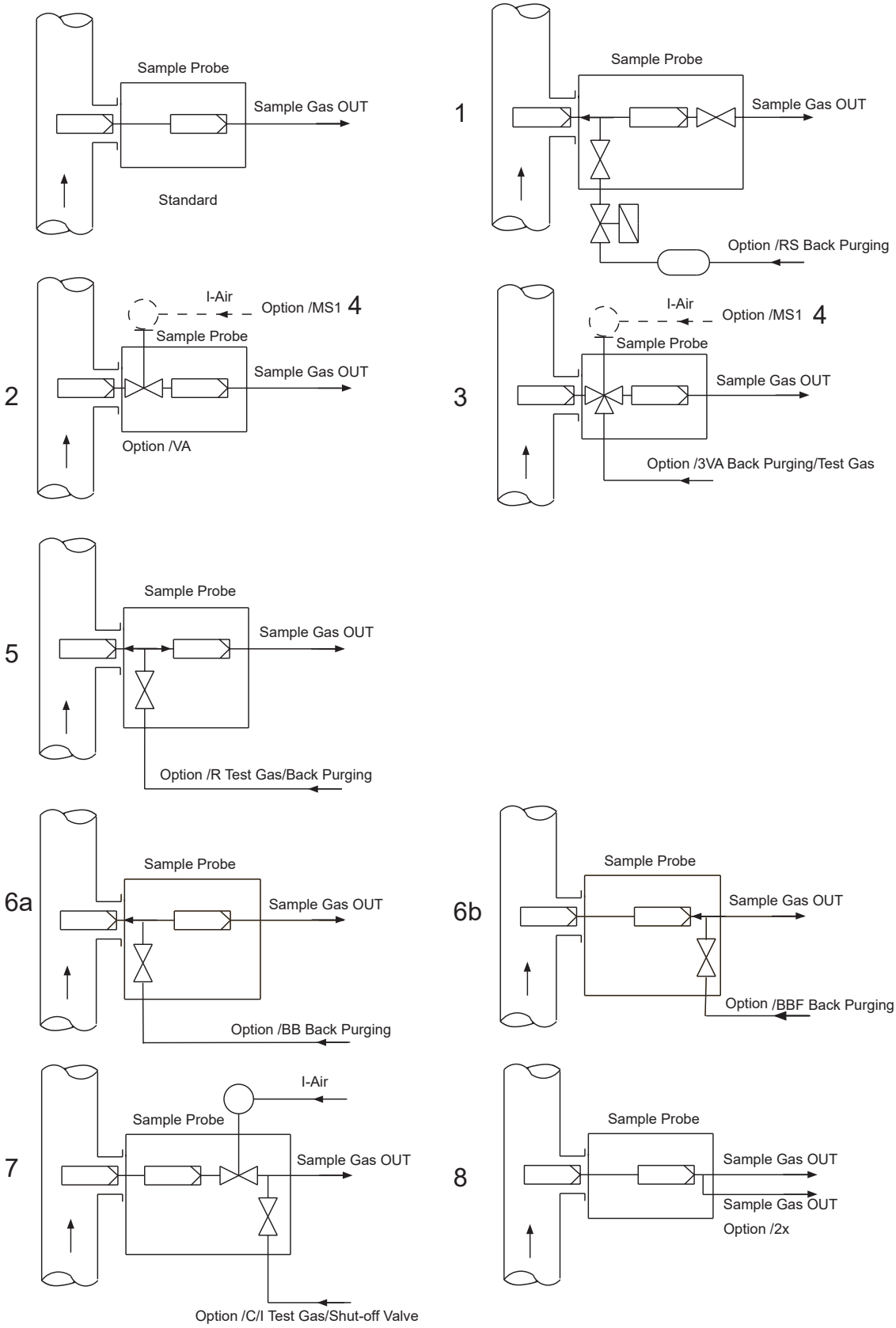

Possible combinations of options, see table page 3

M&C TechGroup Germany GmbH • Rehhecke 79 • 40885 Ratingen • Germany
info@mc-techgroup.com • www.mc-techgroup.com • P. +49 2102 . 935 - 0

Technical specifications and illustrations are without obligation, subject to modifications. 11.24- 1.01.02

SP3200(V) with heating type HEX5-1.08

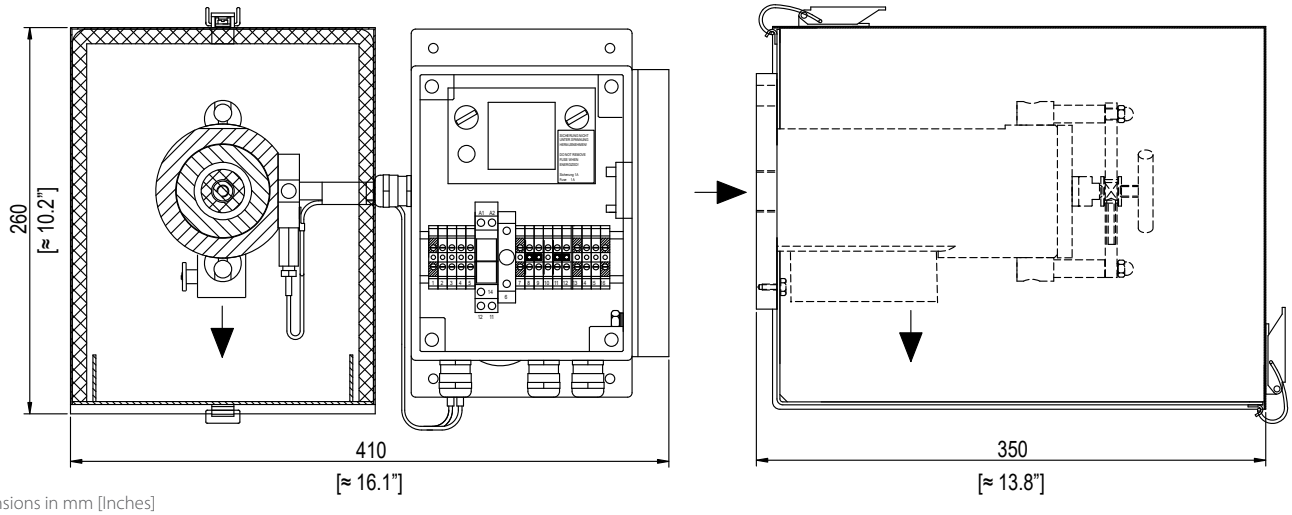

Dimensions in mm [Inches]

SP3200(V) with heating type HEX5-2.08

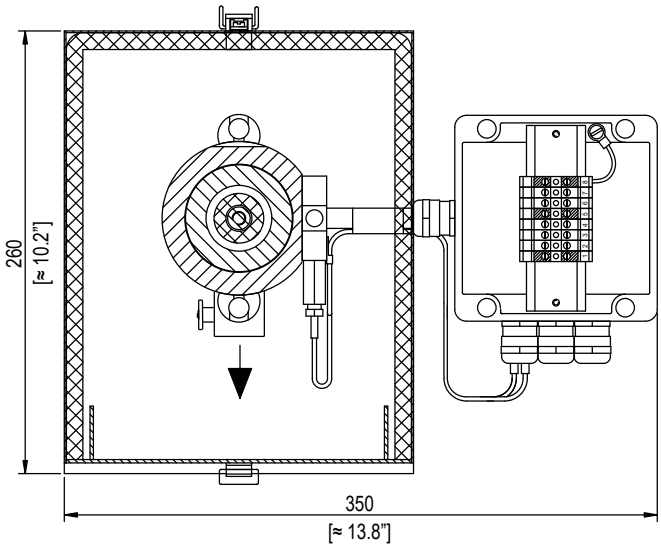

Dimensions in mm [Inches]

External controller for heating HEX5-2.08

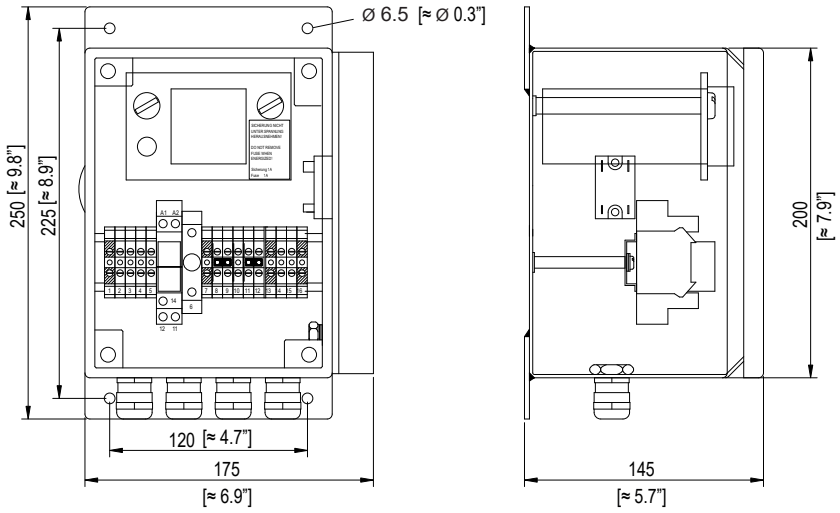

Dimensions in mm [Inches]

Options pre-filters and extension tubes

Options	Version	Part No.
Pre-filter type V20-0 for SP probes, internal stainless steel pre-filter with volume displacer inside, length: 220 mm [≈ 8.7"], 51 mm OD, filter porosity: 2 µm, temperature: max. 600 °C [1112 °F], connection: G 3/4" male, material: SS 316L/316Ti	V20-0	20S9105
Pre-filter type V20-0/HC for SP probes, internal Hastelloy® pre-filter with volume displacer inside, length: 220 mm [≈ 8.7"], 51 mm OD, filter porosity: 2 µm, temperature: max. 900 °C [1652 °F], connection: G 3/4" male, material: Hastelloy® X	V20-0/HC	20S9115
Pre-filter type V20-1 for SP probes, internal stainless steel pre-filter with volume displacer inside, length: 520 mm [≈ 20.5"], 60 mm OD, filter porosity: 2 µm, temperature: max. 600 °C [1112 °F], connection: G 3/4" male, material: SS 316L/316Ti	V20-1	20S9145
Pre-filter type V20-1/HC for SP probes, internal Hastelloy® pre-filter with volume displacer inside, length: 520 mm [≈ 20.5"], 60 mm OD, filter porosity: 2 µm, temperature: max. 900 °C [1652 °F], connection: G 3/4" male, material: Hastelloy®-X	V20-1/HC	20S9155
Pre-filter type V20-1/HC for SP probes, internal Hastelloy® pre-filter with volume displacer inside, length: 520 mm [≈ 20.5"], 60 mm OD, filter porosity: 0.5 µm, temperature: max. 900 °C [1652 °F], connection: G 3/4" male, material: Hastelloy®-X	V20-1/HC	20S9156
Pre-filter type V20-3 for SP probes, internal stainless steel pre-filter with volume displacer inside, length: 300 mm [≈ 11.8"], 31 mm OD, filter porosity: 2 µm, temperature: max. 600 °C [1112 °F], connection: G 3/4" male, material: SS 316L/316Ti	V20-3	20S9300
Extra charge for extension of in-situ stainless steel pre-filter V20-3 or V20-4 for each 100 mm [≈ 3.9"] additional length (from standard length 300 mm [≈ 11.8"] to .... mm), max. 1000 mm [≈3.3 ft] total filter length, material: SS 316L/316Ti	V20-3	20S9310
Pre-filter type V20-T for SP probes, backflushable internal hose pre-filter with support tube, length: 400 mm [≈ 15.8"], 40 mm OD, filter porosity: 3 µm, temperature: max. 200 °C [392 °F], connection: G 3/4" male, material: PTFE, SS 316Ti	V20-T	20S9315
Extension tube Vm 500 mm for pre-filters at SP probes, with G 3/4" male connection and internal volume displacer, length: 500 mm [≈ 19.7"], incl. gasket set, sampling temperature: max. 600 °C [1112 °F], material: SS 316 Ti (for pre-filters V20)	Vm500	20S9165
Extension tube Vm1000 mm for pre-filters at SP probes, with G 3/4" male connection and internal volume displacer, length: 1000 mm [≈ 3.3 ft], incl. gasket set, sampling temperature: max. 600 °C [1112 °F] , material: SS 316 (for pre-filters V20)	Vm1000	20S9170
Extension tube Vm1500 mm for pre-filters at SP probes with G 3/4" male connection and internal volume displacer, length: 1500 mm [≈ 4.9 ft], incl. gasket set, temperature: max. 600 °C [1112 °F], material: SS 316Ti (for pre-filters V20)	Vm1500	20S9175

For choosing the adequate pre-filter, see also data sheet "Pre-Filters for Gas Sample Probes Series SP®, Version SP2000/V20 with G 3/4" connection, SP2000/V12 with flange connection, Version SP2000/20SS 150 with tube connection"

Options sample tubes

Options	Version	Part No.
Sample tube SP 2000/SS, length: 1 m [≈ 3.3 ft], connection: G 3/4" male, temperature: max. 600 °C [1112 °F], material: SS 316Ti	SP2000/SS	20S9065
Sample tube SP 2000/SS-Vm, length: 1 m [≈ 3.3 ft], with volume displacer, connection: G 3/4" male, temperature: max. 600 °C [1112 °F], material: SS 316Ti	SP2000/SS-Vm	20S9067
Sample tube SP 2000/HC, length: 1 m [≈ 3.3 ft], connection: G 3/4" male, temperature: max.: 900 °C [1652 °F], material: Hastelloy®-C	SP2000/HC	20S9090
Sample tube SP2000/KA, length: 1 m [≈ 3.3 ft], connection: G 3/4" male, temperature: max. 1300 °C [2372 °F], material: Kanthal®	SP2000/KA	20S9080
Sample tube SP2000/IN, length: 1 m [≈ 3.3 ft], connection G 3/4" male, temperature: max. 1100 °C [2012 °F], material: Inconel®	SP2000/IN	20S9077
Sample tube SP2000/HR, length: 1 m [≈ 3.3 ft], connection G 3/4" male, temperature: max. 1200 °C [2192 °F], material: HR-160® Alloy	SP2000/HR160	20S9103

For choosing the adequate sample tube, see also data sheet "Sample Tubes for Gas Sample Probes Series SP® with G 3/4" connection thread".
Hastelloy® and HR-160® Alloy are registered trademarks by Haynes International, USA.
Kanthal® is a registered trademark by Sandvik Intellectual Property AB, Schweden.
Inconel® is a registered trademark by Special Metals Corporation, USA.

Temperature classes (Please indicate the required temperature class in your order)

Part number	T-Class ATEX Cenelec/IEC/NEC 505	T-Class CSA NEC 500	Operating temperature °C	Limiter °C
20S9608	T2	T2	230 [446 °F]	235 [455 °F]
20S9609		T2A	215 [419 °F]	220 [428 °F]
20S9610	T3	T2B	185 [365 °F]	190 [374 °F]
20S9611		T2C	175 [347 °F]	180 [356 °F]
20S9612		T2D	160 [320 °F]	165 [329 °F]
20S9613		T3	150 [302 °F]	155 [311 °F]
20S9614		T3A	135 [275 °F]	140 [284 °F]
20S9615	T4	T3C	120 [248 °F]	125 [257 °F]
20S9616		T4	95 [203 °F]	100 [212 °F]
20S9617	T5	T4A	85 [185 °F]	90 [194 °F]
20S9618		T5	70 [158 °F]	75 [167 °F]

The programming and closing of the controller are performed at works in accordance with the specifications in your order.

M&C TechGroup Germany GmbH • Rehhecke 79 • 40885 Ratingen • Germany
info@mc-techgroup.com • www.mc-techgroup.com • P. +49 2102 . 935 - 0
Technical specifications and illustrations are without obligation, subject to modifications. 11.24- 1.01.02

SP180-H/MA

Gas Sample Probe Series SP®

Electrically heated, compact version with protection cover and test gas connection as standard
SP180-H/MA for special applications aboard ships

Special Features

- **DNV Type Approval Certificate VI-7-2 for application aboard ships**
- **Sampling of dust-loaded process gases**
- **Small volume, fast response time**
- **Self-regulating electrical heating**
- **Alarm contact for low temperature**
- **With test gas connection according to EN 14181 (test gas feeding via filter element)**
- **Easy mounting and maintenance**
- **Sample tube made of Hastelloy® optional**

Application

The M&C gas sample probe version SP180-H/MA is suitable for continuous gas sampling. The compact design requires only limited space. The gas sample probe has a DNV Type Approval Certificate for special application aboard ships.

Description

The design of the M&C probe version SP180-H/MA guarantees easy mounting, safe operation and problem-free maintenance.

Changing of the external filter element does not require tools or disassembling of the gas sample line. To change the filter element, the complete filter assembly can be removed out of the probe head.

The gaskets can easily be checked for leaks, the filter housing is easy to clean, and the sample tube can be removed without dismounting the entire sample probe. These are only a few advantages of the M&C probe.

The 0.1 micron glass fiber filter is placed in a heated stainless steel filter housing. Other filter element materials are available on request. The compact design and the new all-round heat insulation and protection cover ensures an optimized heat distribution, as well as a safe operation by keeping the temperature above the dew point in the filter or flange area.

Specially designed self-regulating heating elements are heating the gas sample probe to 180 °C [356 °F] within the range of 110 V to 240 V without switching.

There is no external temperature controller or temperature limitation necessary. A separate thermo switch (< 160 °C [< 320 °F], NO) is built-in to monitor low temperatures. The terminals of the electrical connections are inside a junction box.

The gas sample probe SP180-H/MA is equipped with a calibration gas connection according to EN 14181 (regulation for calibration of emission measuring systems). With this standard feature, calibration gas can enter the gas sample probe via the filter element.

Please select the sample tube, which is right for your application, from the table in this data sheet.

Technical specifications and illustrations are without obligation, subject to modifications. 07.24 - 1.03.06

M&C TechGroup Germany GmbH • Rehhecke 79 • 40885 Ratingen • Germany
info@mc-techgroup.com • www.mc-techgroup.com • P. +49 2102 . 935 - 0

Technical Data

Series SP®	Version SP180-H/MA	Version SP180-H/MA SS
Part No.	02S1860	02S1865
DNV Type Approval Certificate	TAA00002J3	
Protection cover	Yes	
Outdoor mounting	Not for mounting on open deck	
Degree of protection	IP66 EN 60529	
DNV: Location classes	Temperature D, Humidity B, Vibration B, EMC A, Enclosure B	
Ambient temperature	-25 to +60 °C [-13 to +140 °F]	
Vibration/Shock for sample tubes (optional)	4 g, classified acc. to GL (Germanischer Lloyd) (GL-2012 VI section 7, Tab 3.16, characteristic curve 2a)	
Sample pressure	0.4 to 1.5 bar abs.	
Sample temperature	Max. 600 °C [1112 °F]*	
Gas flow rate	Max. 500 Nl/h	
Dust load	Max. 1 g/m³*	
Filter chamber volume	70 ml	
Filter element	Type S-0,1GF, filter porosity 0.1 µm, fiber (other filter elements on request)	
Probe heating	+180 °C [356 °F] self-regulating	
Ready for operation	After 2 hours	
Low temperature alarm contact, alarm point	< 160 °C [< 320 °F], NO	
Low temperature alarm contact, contact rating	250 V - 3 A AC, 30 V - 3 A DC	
Connection sample outlet	1/4" NPT female with Swagelok® tube connector for 6 mm tube (DN 4/6)	
Connection calibration gas	Swagelok® tube connector for 6 mm tube (DN 4/6), connection including sealing plug	
Power supply	110 V up to 240 V, 50/60 Hz	
Power consumption	Start up: 400 VA, during operation: 100 VA, fuse 6 A	
Terminal box	Aluminium	Stainless steel VA
Electrical connection	Terminals max. 2.5 mm², 1 x M 20, 1 x M 16 cable glands	
Electrical equipment standard	EN 61010, EN 60335-1	
Flammability test protection cover	Needle-flame test method IEC 60695-11-5:2005, severity level: 30 s	
Mounting flange	DN 65 PN 6, Form B stainless steel 316Ti	
Material of sample contacting parts	Stainless steel 316/316Ti, FKM, glass fiber	
Dimensions (W x H x D)	Approx. 270 (with calibration gas connection) x 280 x 225 mm [≈ 10.6" x 11" x 8.9"]	
Weight	Approx. 7.5 kg [≈ 16.5 lbs]	

* Standard, other versions on request.
Swagelok® is a registered trademark for tube fittings by Swagelok Company, USA.
Please note: Nl/h and Nl/min refer to the German standard DIN 1343 and are based on these standard conditions: 0 °C [32 °F], 1013 mbar.

ΔP and T90 at flow of:	100	200	500	Nl/h
ΔP pressure loss with new filter element 0,1 GF	< 4	7	15	mbar
T90 time-without sample tube/prefilter	4.0	2.5	< 1.0	s

Dimensions SP180-H/MA

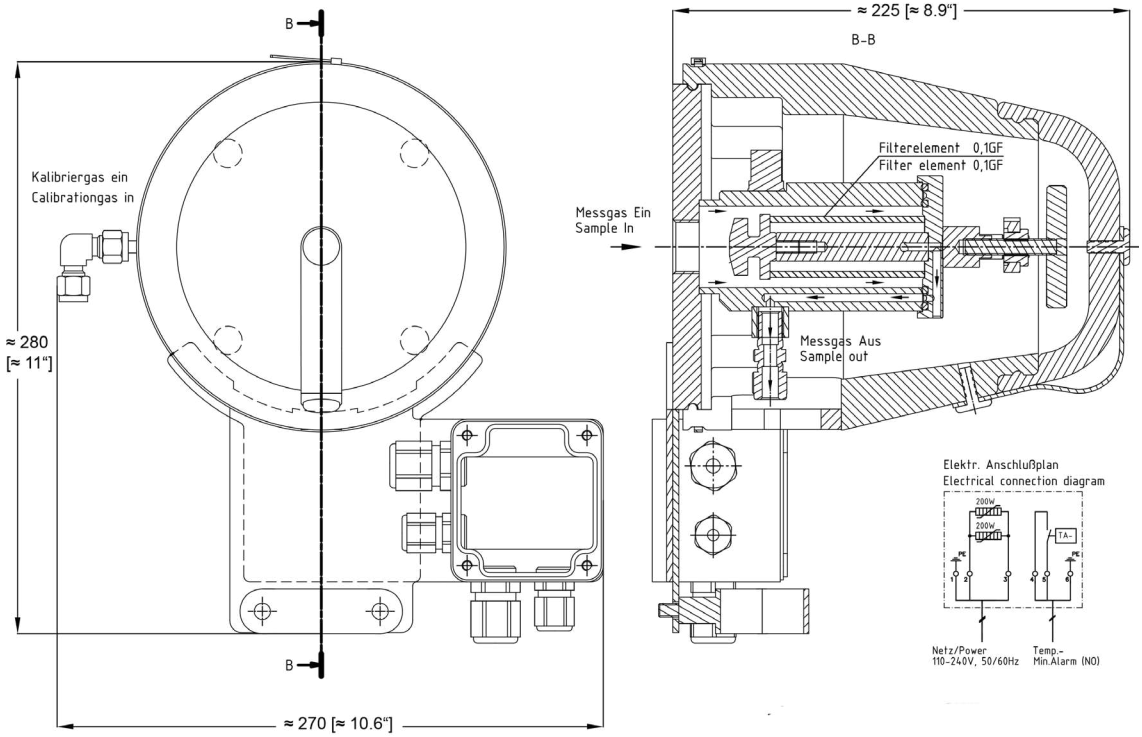

Dimensions in mm [inches]

M&C TechGroup Germany GmbH • Rehhecke 79 • 40885 Ratingen • Germany
info@mc-techgroup.com • www.mc-techgroup.com • P. +49 2102 . 935 - 0

Technical specifications and illustrations are without obligation, subject to modifications. 07.24 - 1.03.06

Option: Sample Tubes

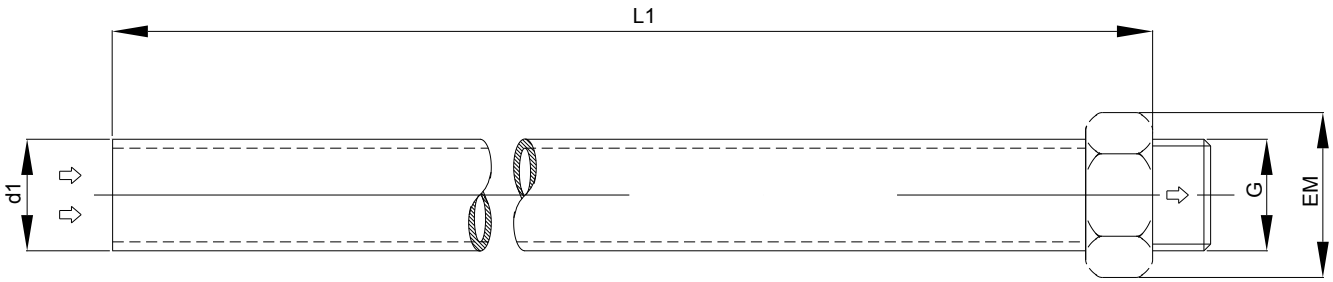

Classified according to GL (Germanischer Lloyd) GL-2012 VI section 7, Tab 3.16, characteristic curve 2b)

M&C Probe Sample Tube Type	Part No.	Max. Temperature °C	Material Tube/Connection	Length "L1" mm	Connection Thread "G"	Tube ø d1 outer/inner mm	Connection ø a "EM" mm
SP180M/HC/400	92S0040	600 [1112 °F]	Hastelloy®	400 [≈ 15.75"]	G 3/4" male	27/20	40
SP180M/HC/600	92S0060	600 [1112 °F]	Hastelloy®	600 [≈ 23.62"]	G 3/4" male	27/20	40
SP180M/HC/800	92S0080	600 [1112 °F]	Hastelloy®	800 [≈ 31.5"]	G 3/4" male	27/20	40

Hastelloy® is the brand name of a nickel-based alloy from Haynes International.