TechGroup

Product Category Gas Analysis.

Oxygen Analyzers | Multigas Analyzers | Mercury Systems

www.mc-techgroup.com

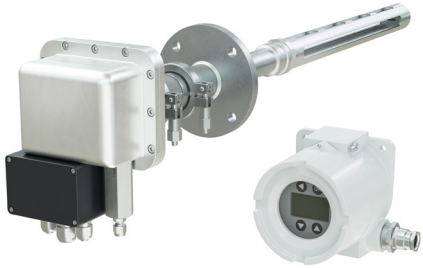

ILA1-A000-EX-PXX80 with HMI

In-situ Laser Analyzer

Optical Oxygen Measurement
Version ILA1-A000-EX

Special Features

- **O_2 measuring ranges from 0 to 100 vol%**
- **Maximum process temperature 900 °C [1652 °F]**
- **Max. process pressure 7 bar abs.**
- **ATEX version approval**
- **Laser Class 1 - eye-safe**
- **Analog signal outputs 2 x 4-20 mA**
- **IP65 for installations in harsh environments**
- **Digital interfaces: CAN, RS485 and Modbus TCP/IP**
- **Access to all parameters via HMI (Human Machine Interface)**

Application

The In-situ Laser Analyzer ILA1-A000-EX is a high-performance oxygen analyzer for industrial and process control applications.

Description

The In-situ Laser Analyzer ILA1-A000-EX consists of a probe with a measuring section, probe flange and sensor head with a separate HMI unit. The transmitter and receiver are located in the sensor head while the beam reflector is placed inside the tip of the probe lance in the measuring section. The active measuring path is the result of the laser installed in the sensor head emitting an infrared laser beam that passes through the process gas to the retroreflector and from there is reflected back to the receiver in the sensor head.

An integrated system for continuous N_2 purge prevents dust and other contaminates from coating the retroreflector and sensor head window.

The external HMI or a PC with access to the web interface can be used to operate, configure and perform diagnostics on the ILA1-A000-EX.

Example applications are real-time oxygen measurements for combustion control, safety monitoring and process control.

Industries that can benefit from this measurement technology are chemical and petrochemical plants, power plants, waste incinerators and the steel industry.

The analyzer is particularly suitable for controlling combustion processes, process optimization and control, ensuring facility and workplace safety, explosion protection, quality control and measurement in corrosive and toxic gases.

Dimensions

ILA1-A000-EX-PXX80 with HMI and options

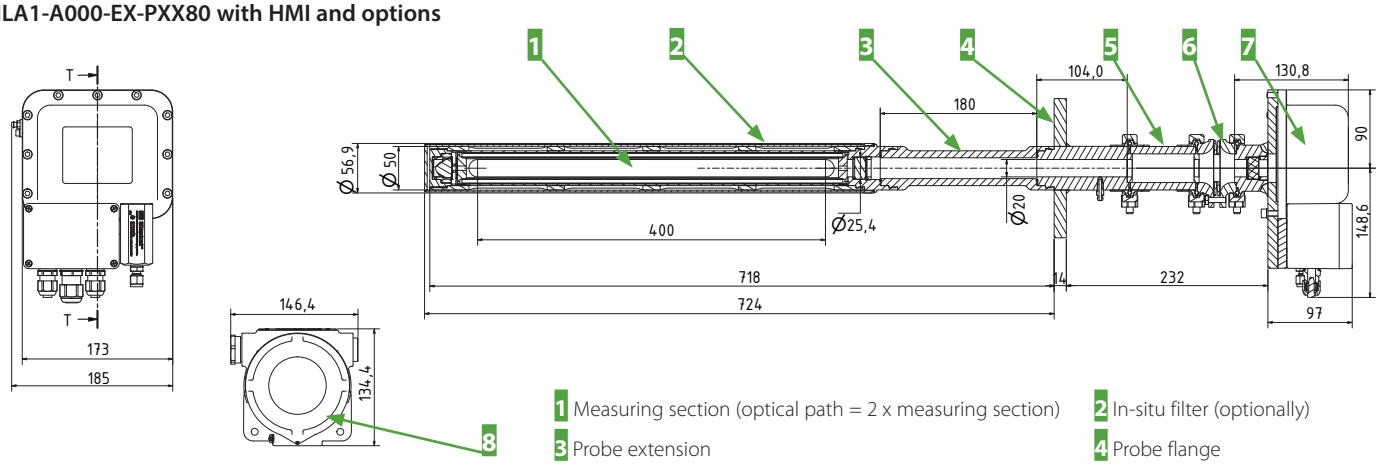

1 Measuring section (optical path = 2 x measuring section)
2 In-situ filter (optionally)
3 Probe extension
4 Probe flange
5 Heat insulation unit
6 Alignment unit
7 Sensor head
8 HMI (optionally)

ILA1-A000-EX-PXX20 with HMI

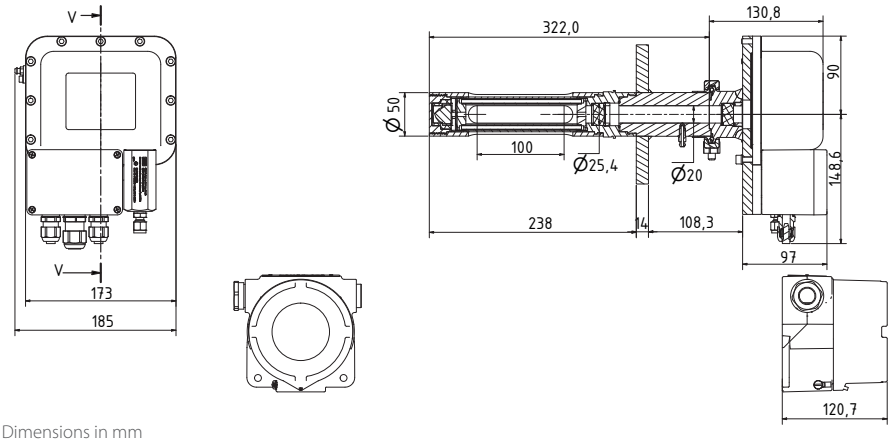

Dimensions in mm

Dimensions and Weights (example probes)

In-situ Laser Analyzer	20 cm path length	40 cm path length	80 cm path length
Probe (sensor head, probe flange and measuring section): dimensions (W x H x L)	185 x 238.6 x 460 mm [≈ 7.3" x 9.4" x 18"]	185 x 238.6 x 560 mm [≈ 7.3" x 9.4" x 22"]	185 x 238.6 x 760 mm [≈ 7.3" x 9.4" x 30"]
Probe (sensor head, probe flange and measuring section): weight	Approx. 10.6 kg [≈ 23.4 lbs]	Approx. 14.9 kg [≈ 32.8 lbs]	Approx. 16 kg [≈ 35.3 lbs]
HMI Ex version: dimensions (W x H x L)	146.4 x 134.4 x 120.7 mm [≈ 5.8" x 5.3" x 4.8"]		
HMI Ex version: weight	Approx. 2.1 kg [≈ 4.6 lbs]		
Sensor head: housing material	Aluminum		
Probe flange: material	Stainless steel 316		
Probe flange: dimensions	ANSI-flanges: 2" Class 150, 2.5" or 3" Class 150 or higher; DN 80 PN 40, DN 65 PN 6		

Technical Data of the Overall System

In-situ Laser Analyzer	ILA1-A000-EX
Gas measured	O_2
Measuring range	0 to 100 vol%
Limit of detection* (depending on optical path length)	ILA1-A000-EX-PXX20: 500 ppm ILA1-A000-EX-PXX40: 250 ppm ILA1-A000-EX-PXX60: 170 ppm ILA1-A000-EX-PXX80: 125 ppm
Max. process gas temperature	Depends on the selected thermal package and the material of process flange, probe extension and measuring section. The max. process gas temperature is determined by the component with the lowest permitted temperature.
Max. process gas pressure	7 bar abs.

M&C TechGroup Germany GmbH • Rehhecke 79 • 40885 Ratingen • Germany
info@mc-techgroup.com • www.mc-techgroup.com • P. +49 2102 . 935 - 0
Technical specifications and illustrations are without obligation, subject to modifications. 12.25 - 1.00.04

Technical Data of the Overall System (continued)

In-situ Laser Analyzer	ILA1-A000-EX
Length of optical path (optical path = 2 x measuring section)	Measuring sections with 200 [≈ 7.9"], 400 [≈ 15.7"], 600 [≈ 23.6"] and 800 mm [≈ 31.5"] optical path length available
Repeatability deviation (depending on optical path length)	ILA1-A000-EX-PXX20: ±1 % of measured value or ±500 ppm O_2, whichever is higher ILA1-A000-EX-PXX40: ±1 % of measured value or ±250 ppm O_2, whichever is higher ILA1-A000-EX-PXX60: ±1 % of measured value or ±170 ppm O_2, whichever is higher ILA1-A000-EX-PXX80: ±1 % of measured value or ±125 ppm O_2, whichever is higher
Linearity error	< 1 %
Drift	< 2 % of measuring range every 12 months
Measuring repetition rate	1 second
Purging of windows	Nitrogen (N_2) with a purity class of 4.0 (99.99 % purity) or higher
Recommended purging gas flow	0 - 10 Nl/min, depending on the application
Purging gas flow for housing	Only slight overpressure of 20 mbar needed; flow approx. 5 ml/min
Wetted material	Depends on the selected material of the process flange, probe extension and measuring section
Process windows	Sapphire, leak tested and certified in accordance to EN1779:1999 norm
Retroreflector	UVFS (UV Fused Silica)
Power supply	24 V DC ±10 % 6 W fused with max. 20 A (short-circuit current)
Power consumption	< 6 VA
Process gas speed	1 m/s, recommended: over 5 m/s
EMC immunity standard	In accordance with EN 61326-1
Warm-up time	It takes approximately 3 minutes for the system to be fully operational
Alignment unit	To align measuring section and sensor head, weight: 1 kg [≈ 2.2 lbs]

* The limit of detection (LOD) was measured under constant ambient conditions in the compensated temperature and pressure range (±0.015 %/mbar) and with a measurement time of 10 seconds and a moving average of 10 points. Additionally, the limit of detection is depending on sample gas and the selected measuring range.
Please note: Nl/h and Nl/min refer to the German standard DIN 1343 and are based on these standard conditions: 0 °C [32 °F], 1013 mbar.

Interfaces for ILA1-A000-EX

In-situ Laser Analyzer	Sensor Head
Analog outputs	2 x 4-20 mA, active (for concentration and transmission)
Analog inputs	2 x 4-20 mA (for pressure and temperature), active or passive
Relay output	Error status 60 V AC/60 V DC, max. 500 mA, NO (normally open)
Relay input	Maintenance status min. 6 V DC, max. 60 V DC, NO (normally open)
Digital interfaces	CAN (connection to HMI), RS485, Modbus TCP/IP WebServer-based software for real-time logging of the gas concentration and optical transmission

Material Selection: Thermal Package (heat insulation unit and set of gaskets)

Thermal package	Material: heat insulation unit	Material: gaskets	Max. process gas temperature
TP NG065	-	Gylon® Style 3522	65 °C
TP DG250	Durobest DB250R	Gylon® Style 3522	250 °C
TP ZT900	ZrO_2	ThermA-Pur® Style 4122	900 °C*

*Temperature due to heat conduction to the sensor head
GYLON® is a registered trademark for a high-performance PTFE material by Garlock Sealing Technologies LLC, USA.
THERMa-PUR®Style 4122 is a registered trademark for non-metallic gaskets for use in extreme temperature applications by Garlock Sealing Technologies LLC, USA.

Material Selection of Wetted Parts: process flange, probe extension and measuring section

Material: process flange, probe extension and measuring section	Max. process gas temperature	Corrosion resistance
Stainless steel 316Ti (standard)	500 °C	Corrosion-resistant
Stainless steel F51	250 °C	Increased corrosion resistance
Stainless steel 904L	400 °C	Increased corrosion resistance
Stainless steel 321H (temperature range increased)	600 °C	Reduced corrosion resistance
Nickel-based alloy, e.g. Hastelloy® (high temperature)	900 °C	High corrosion resistance

Hastelloy® is a registered trademark for a nickel-chromium-molybdenum alloy by Haynes International, USA.

M&C TechGroup Germany GmbH • Rehhecke 79 • 40885 Ratingen • Germany
info@mc-techgroup.com • www.mc-techgroup.com • P. +49 2102 . 935 - 0

Laser Safety

In-situ Laser Analyzer	ILA1-A000-EX
Laser class for laser in probe	Class 1 according to IEC 60825-1, eye-safe
Laser class during maintenance	Class 3B according to IEC 60825-1, avoid exposure to beam

Ex Safety

In-situ Laser Analyzer	ILA1-A000-EX
Markings	$T_{ambient}$ -40 °C to +59 °C Ex II (1)2 G Ex db eb [op is Ga] IIC T6 Gb Ex II (1)2 D Ex tb [op is Da] IIIC T85 °C Db $T_{ambient}$ -40 °C to +65 °C Ex II (1)2 G Ex db eb [op is Ga] IIC T5 Gb Ex II (1)2 D Ex tb [op is Da] IIIC T92 °C Db
EU Directives	IEC 60079-0:2017 Ed. 7 IEC 60079-1:2014 Ed. 7 IEC 60079-7:2015/A1:2017 Ed. 5.1 IEC 60079-14:2014 Ed. 6 IEC 60079-28:2015 Ed. 2 IEC 60079-31:Ed. 3 EN 60079-0:2018/AC:2020 EN 60079-1:2014/AC:2018 EN 60079-7:2015/AC:2017 EN 60079-14:2014/AC:2016 EN 60079-28:2015 EN 60079-31:2014

Ambient Conditions

In-situ Laser Analyzer	ILA1-A000-EX
Ambient pressure	700 to 1200 hPa
Ambient humidity	RH < 99 %, non-condensing
Anbient temperature	-40 to +59 °C [-40 to +138.2 °F] for T6 -40 to +65 °C [-40 to +149 °F] for T5
Storage temperature	-40 to +70 °C [-40 to +158 °F]
Degree of protection	In accordance with IP65

Type Designation: ILA1-A000-EX-P ...

Probe extension		Path length		Flange version		Material		Temperature package	
XX		XX		-XXX		-X		X	
00	No extension								
20	20 cm								
45	45 cm								
		20	20 cm						
		40	40 cm						
		60	60 cm						
		80	80 cm						
				-A01	2" Class 150				
				-A02	2.5" Class 150				
				-A03	2.5" Class 300				
				-A04	3" Class 150				
				-A05	3.5" Class 150				
				-D01	DN 65 PN 6				
				-D02	DN 80 PN 40				
						-S	1.4571 (standard)		
						-R	1.4462 (corrosion resistant)		
						-V	1.4539 (very corrosion resistant)		
						-T	1.4878 (temperature range increased)		
						-H	Nickel-based alloy (high temperature)		
								N	Gylon gaskets, No insulation unit
								D	Gylon gaskets, Durobest insulation unit
								Z	ThermA-Pur gaskets, ZrO_2 insulation unit

M&C TechGroup Germany GmbH • Rehhecke 79 • 40885 Ratingen • Germany
info@mc-techgroup.com • www.mc-techgroup.com • P. +49 2102 . 935 - 0
Technical specifications and illustrations are without obligation, subject to modifications. 12.25 - 1.00.04

Options

In-situ Laser Analyzer	ILA1-A000-EX
ILA HMI DCU10 EX	HMI to operate, configure or perform diagnostics on the ILA1-A000-EX In-situ Laser Analyzer. - LCD display: 128 x 64 pixel - Analog outputs: 4 x 4-20 mA, programmable, active - Analog inputs: 2 x 4-20 mA, programmable, active/passive - Relay outputs: 2 x relay outputs programmable: 60 V AC/60 V DC, max. 120 mA, NO (normally open) - Relay inputs: 2 x relay inputs programmable: min. 16 V DC, max. 60 V DC, NO (normally open) - Digital interfaces: CAN (connection to sensor head)
SU EL10	Supply unit with 24 V DC including: 2 x cable glands (5-14 mm) for connecting laser head and HMI, 5 x cable glands (4-11 mm) for power supply, analog signals and status signals; interfaces: RJ45 for Modbus TCP/IP; operating elements: mains switch and maintenance switch; protection class: IP65
SU EP10	Supply unit incl. 24 V DC power supply unit with 50 W for supply voltage 100-240 V AC including: 2 x cable glands (5-14 mm) for connecting laser head and HMI, 5 x cable glands (4-11 mm) for power supply, analog signals and status signals; interfaces: RJ45 for Modbus TCP/IP; operating elements: mains switch and maintenance switch; protection class: IP65
SU EP10 EX	EX supply unit incl. 24 V DC power supply unit with 50 W for supply voltage 100-240 V AC including: 2 x cable glands (5-14 mm) for connecting laser head and HMI, 5 x cable glands (4-11 mm) for power supply, analog signals and status signals; interfaces: RJ45 for Modbus TCP/IP; operating elements: mains switch and maintenance switch; protection class: IP65
SU G10	Supply unit for purge gas including: 1 x purge gas IN (pressure: 3-8 bar g) for nitrogen (N_2) or compressed air (dry, free of dust and grease), **Note:** The purge gas requirements of the specific laser analyzer must be taken into account. 1 x gas path with flow meter to purge measuring section (gas flow: 0-13 Nl/min), 1 x gas path with pressure regulator (0-0.7 bar g) for pressurized sensor head enclosure (0.1 bar above ambient pressure), 1 x gas path with pressure regulator (0-6.8 bar g) for pressurized buffer zone enclosure (1 bar above process pressure); protection class: IP65
SU G10 EX	EX supply unit for purge gas including: 1 x purge gas IN (pressure: 3-8 bar g) for nitrogen (N_2) or compressed air (dry, free of dust and grease), **Note:** The purge gas requirements of the specific laser analyzer must be taken into account. 1 x gas path with flow meter to purge measuring section (gas flow: 0-13 Nl/min), 1 x gas path with pressure regulator (0-0.7 bar g) for pressurized sensor head enclosure (0.1 bar above ambient pressure), 1 x gas path with pressure regulator (0-6.8 bar g) for pressurized buffer zone enclosure (1 bar above process pressure); protection class: IP65
ILA cable, 10 m, 10 x 2 x 0.25 mm	Pre-assembled ILA cable 10 x 2 x 0.25 mm, length: 10 m, for connecting laser head and electrical supply unit
ILA HMI, cable, 10 m, 12 x 2 x 0.25 mm	Pre-assembled ILA cable, 12 x 2 x 0.25 mm, length: 10 m, for connecting HMI and electrical supply unit
EX ILA power supply	ILA power supply TR TSPC050-124 24VDC EX
ILA cellular VPN router RO1520-4L	The cellular router enables remote access to the ILA laser analyzer. A SIM card for operating the router must be provided by the customer.
PS KE10-80R EX	EX piezoresistive pressure transmitter, 0-10 bar abs., pressure connection: G 1/2", complete temp. range: -10 to +80 °C [-40 to 1112 °F]
PS KE10-80R	Piezoresistive pressure transmitter, 0-10 bar abs., pressure connection: G 1/2", complete temp. range: -10 to +80 °C [-40 to 1112 °F]
TS JU600-400A EX	EX screw-in resistance thermometer with end-to-end protection tube, -40 to +600 °C, connection: G 1/2" threaded
TS JU600-400A	Screw-in resistance thermometer with end-to-end protection tube, -40 to +600 °C, connection: G 1/2" threaded
Probe extension	Various lengths up to 500 mm available
In-situ filter	Filter to protect the measuring section against high dust concentrations

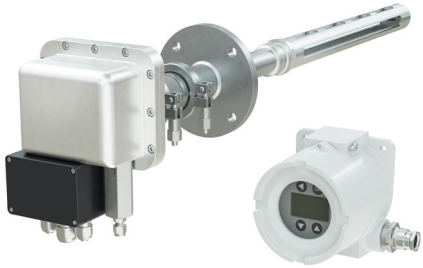

ILA1-B000-EX-PXX80 with HMI

In-situ Laser Analyzer

Optical Sulfur Dioxide Measurement
Version ILA1-B000-EX

Special Features

- **SO_2 measuring ranges from 0-0.5 vol% to 0-2 vol%**
- **Maximum process temperature 900 °C [1652 °F]**
- **Max. process pressure 7 bar abs.**
- **ATEX version approval**
- **Laser Class 1 - eye-safe**
- **Analog signal outputs 2 x 4-20 mA**
- **IP65 for installations in harsh environments**
- **Digital interfaces: CAN, RS485 and Modbus TCP/IP**
- **Access to all parameters via HMI (Human Machine Interface)**

Application

The In-situ Laser Analyzer ILA1-B000-EX is a high-performance sulfur dioxide analyzer for industrial and process control applications.

Description

The In-situ Laser Analyzer ILA1-B000-EX consists of a probe with a measuring section, probe flange and sensor head with a separate HMI unit. The transmitter and receiver are located in the sensor head while the beam reflector is placed inside the tip of the probe lance in the measuring section. The active measuring path is the result of the laser installed in the sensor head emitting an infrared laser beam that passes through the process gas to the retroreflector and from there is reflected back to the receiver in the sensor head.

An integrated system for continuous N_2 or instrument air purge prevents dust and other contaminates from coating the retroreflector and sensor head window.

The external HMI or a PC with access to the web interface can be used to operate, configure and perform diagnostics on the ILA1-B000-EX.

Application examples include process monitoring at sulphur recovery plants, combustion optimization and control in cement plants and in sulphuric acid production as well as monitoring SO_2 scrubbers at stationary combustion plants and on ships.

Industries that can benefit from this measurement technology are chemical and petrochemical plants, power plants, waste incinerators and the steel industry.

The analyzer is particularly suitable for controlling combustion processes, process optimization and control, ensuring facility and workplace safety, explosion protection, quality control and measurement in corrosive and toxic gases.

Dimensions

ILA1-B000-EX-PXX80 with HMI and options

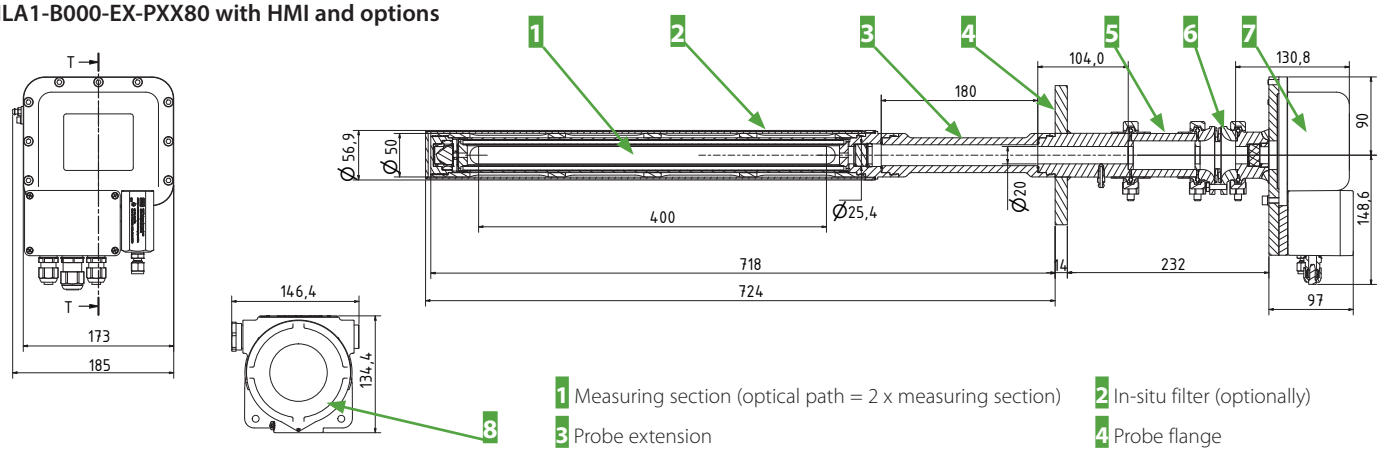

1 Measuring section (optical path = 2 x measuring section)
2 In-situ filter (optionally)
3 Probe extension
4 Probe flange
5 Heat insulation unit
6 Alignment unit
7 Sensor head
8 HMI (optionally)

ILA1-B000-EX-PXX20 with HMI

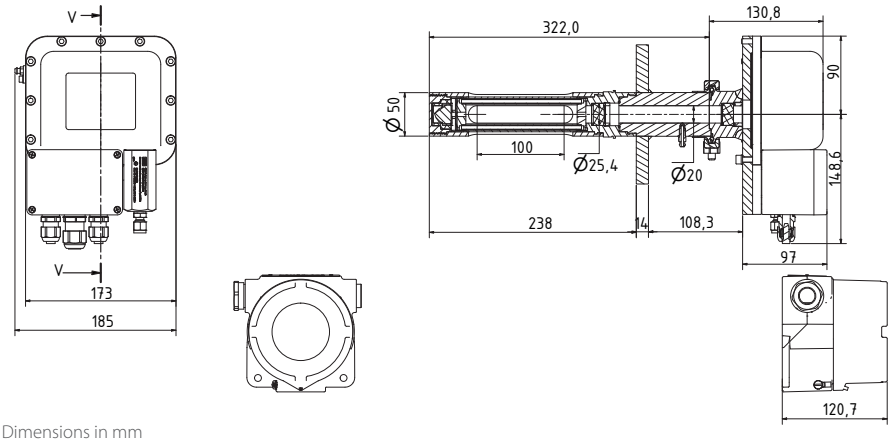

Dimensions in mm

Dimensions and Weights (example probes)

In-situ Laser Analyzer	20 cm path length	40 cm path length	80 cm path length
Probe (sensor head, probe flange and measuring section): dimensions (W x H x L)	185 x 238.6 x 460 mm [≈ 7.3" x 9.4" x 18"]	185 x 238.6 x 560 mm [≈ 7.3" x 9.4" x 22"]	185 x 238.6 x 760 mm [≈ 7.3" x 9.4" x 30"]
Probe (sensor head, probe flange and measuring section): weight	Approx. 10.6 kg [≈ 23.4 lbs]	Approx. 14.9 kg [≈ 32.8 lbs]	Approx. 16 kg [≈ 35.3 lbs]
HMI Ex version: dimensions (W x H x L)	146.4 x 134.4 x 120.7 mm [≈ 5.8" x 5.3" x 4.8"]		
HMI Ex version: weight	Approx. 2.1 kg [≈ 4.6 lbs]		
Sensor head: housing material	Aluminum		
Probe flange: material	Stainless steel 316		
Probe flange: dimensions	ANSI-flanges: 2" Class 150, 2.5" or 3" Class 150 or higher; DN 80 PN 40, DN 65 PN 6		

Technical Data of the Overall System

In-situ Laser Analyzer	ILA1-B000-EX
Gas measured	SO_2
Measuring range (depending on optical path length)	ILA1-B000-EX-PXX20: 0 to 2 vol% ILA1-B000-EX-PXX40: 0 to 1 vol% ILA1-B000-EX-PXX60: 0 to 0.7 vol% ILA1-B000-EX-PXX80: 0 to 0.5 vol%
Detection limit* (depending on optical path length)	ILA1-B000-EX-PXX20: 100 ppm ILA1-B000-EX-PXX40: 50 ppm ILA1-B000-EX-PXX60: 33 ppm ILA1-B000-EX-PXX80: 25 ppm
Max. process gas temperature	Depends on the selected thermal package and the material of process flange, probe extension and measuring section. The max. process gas temperature is determined by the component with the lowest permitted temperature.
Max. process gas pressure	7 bar abs.

M&C TechGroup Germany GmbH • Rehhecke 79 • 40885 Ratingen • Germany
info@mc-techgroup.com • www.mc-techgroup.com • P. +49 2102 . 935 - 0
Technical specifications and illustrations are without obligation, subject to modifications. 12.25 - 1.00.03

Technical Data of the Overall System (continued)

In-situ Laser Analyzer	ILA1-B000-EX
Length of optical path (optical path = 2 x measuring section)	Measuring sections with 200 [≈ 7.9"], 400 [≈ 15.7"], 600 [≈ 23.6"] and 800 mm [≈ 31.5"] optical path length available
Repeatability deviation (depending on optical path length)	ILA1-B000-EX-PXX20: ±1 % of measured value or ±100 ppm SO_2, whichever is higher ILA1-B000-EX-PXX40: ±1 % of measured value or ±50 ppm SO_2, whichever is higher ILA1-B000-EX-PXX60: ±1 % of measured value or ±33 ppm SO_2, whichever is higher ILA1-B000-EX-PXX80: ±1 % of measured value or ±25 ppm SO_2, whichever is higher
Linearity error	< 1 %
Drift	< 2 % of measuring range every 12 months
Measuring repetition rate	1 second
Purging of windows	Nitrogen (N_2) or instrument air
Recommended purging gas flow	0 - 10 Nl/min, depending on the application
Purging gas flow for housing	Only slight overpressure of 20 mbar needed; flow approx. 5 ml/min
Wetted material	Depends on the selected material of the process flange, probe extension and measuring section
Process windows	Sapphire, leak tested and certified in accordance to EN1779:1999 norm
Retroreflector	Crystalline material similar to Sapphire
Power supply	24 V DC ±10 % 6 W fused with max. 20 A (short-circuit current)
Power consumption	< 6 VA
Process gas speed	1 m/s, recommended: over 5 m/s
EMC immunity standard	In accordance with EN 61326-1
Warm-up time	It takes approximately 3 minutes for the system to be fully operational
Alignment unit	To align measuring section and sensor head, weight: 1 kg [≈ 2.2 lbs]

* The limit of detection (LOD) was measured under constant ambient conditions in the compensated temperature and pressure range (±0.015 %/mbar) and with a measurement time of 10 seconds and a moving average of 10 points. Additionally, the limit of detection is depending on sample gas and the selected measuring range.
Please note: Nl/h and Nl/min refer to the German standard DIN 1343 and are based on these standard conditions: 0 °C [32 °F], 1013 mbar.

Interfaces for ILA1-B000-EX

In-situ Laser Analyzer	Sensor Head
Analog outputs	2 x 4-20 mA, active (for concentration and transmission)
Analog inputs	2 x 4-20 mA (for pressure and temperature), active or passive
Relay output	Error status 60 V AC/60 V DC, max. 500 mA, NO (normally open)
Relay input	Maintenance status min. 6 V DC, max. 60 V DC, NO (normally open)
Digital interfaces	CAN (connection to HMI), RS485, Modbus TCP/IP WebServer-based software for real-time logging of the gas concentration and optical transmission

Material Selection: Thermal Package (heat insulation unit and set of gaskets)

Thermal package	Material: heat insulation unit	Material: gaskets	Max. process gas temperature
TP NG065	-	Gylon® Style 3522	65 °C
TP DG250	Durobest DB250R	Gylon® Style 3522	250 °C
TP ZT900	ZrO_2	ThermA-Pur® Style 4122	900 °C*

*Temperature due to heat conduction to the sensor head
GYLON® is a registered trademark for a high-performance PTFE material by Garlock Sealing Technologies LLC, USA.
THERMa-PUR®Style 4122 is a registered trademark for non-metallic gaskets for use in extreme temperature applications by Garlock Sealing Technologies LLC, USA.

Material Selection of Wetted Parts: process flange, probe extension and measuring section

Material: process flange, probe extension and measuring section	Max. process gas temperature	Corrosion resistance
Stainless steel 316Ti (standard)	500 °C	Corrosion-resistant
Stainless steel F51	250 °C	Increased corrosion resistance
Stainless steel 904L	400 °C	Increased corrosion resistance
Stainless steel 321H (temperature range increased)	600 °C	Reduced corrosion resistance
Nickel-based alloy, e.g. Hastelloy® (high temperature)	900 °C	High corrosion resistance

Hastelloy® is a registered trademark for a nickel-chromium-molybdenum alloy by Haynes International, USA.

M&C TechGroup Germany GmbH • Rehhecke 79 • 40885 Ratingen • Germany
info@mc-techgroup.com • www.mc-techgroup.com • P. +49 2102 . 935 - 0

Laser Safety

In-situ Laser Analyzer	ILA1-B000-EX
Laser class for laser in probe	Class 1 according to IEC 60825-1, eye-safe
Laser class during maintenance	Laser class 1M according to IEC 60825-1, do not view laser radiation directly with optical instruments

Ex Safety

In-situ Laser Analyzer	ILA1-B000-EX
Marking	$T_{ambient}$ -40 °C to +59 °C Ex II (1)2 G Ex db eb [op is Ga] IIC T6 Gb Ex II (1)2 D Ex tb [op is Da] IIIC T85 °C Db $T_{ambient}$ -40 °C to +65 °C Ex II (1)2 G Ex db eb [op is Ga] IIC T5 Gb Ex II (1)2 D Ex tb [op is Da] IIIC T92 °C Db
EU Directives	IEC 60079-0:2017 Ed. 7 IEC 60079-1:2014 Ed. 7 IEC 60079-7:2015/A1:2017 Ed. 5.1 IEC 60079-14:2014 Ed. 6 IEC 60079-28:2015 Ed. 2 IEC 60079-31:Ed. 3 EN 60079-0:2018/AC:2020 EN 60079-1:2014/AC:2018 EN 60079-7:2015/AC:2017 EN 60079-14:2014/AC:2016 EN 60079-28:2015 EN 60079-31:2014

Ambient Conditions

In-situ Laser Analyzer	ILA1-B000-EX
Ambient pressure	700 to 1200 hPa
Ambient humidity	RH < 99 %, non-condensing
Anbient temperature	-40 to +59 °C [-40 to +138.2 °F] for T6 -40 to +65 °C [-40 to +149 °F] for T5
Storage temperature	-40 to +70 °C [-40 to +158 °F]
Degree of protection	In accordance with IP65

Type Designation: ILA1-B000-EX-P ...

Probe extension		Path length		Flange version		Material		Temperature package	
XX		XX		-XXX		-X		X	
00	No extension								
20	20 cm								
45	45 cm								
		20	20 cm						
		40	40 cm						
		60	60 cm						
		80	80 cm						
				-A01	2" Class 150				
				-A02	2.5" Class 150				
				-A03	2.5" Class 300				
				-A04	3" Class 150				
				-A05	3.5" Class 150				
				-D01	DN 65 PN 6				
				-D02	DN 80 PN 40				
						-S	1.4571 (standard)		
						-R	1.4462 (corrosion resistant)		
						-V	1.4539 (very corrosion resistant)		
						-T	1.4878 (temperature range increased)		
						-H	Nickel-based alloy (high temperature)		
								N	Gylon gaskets, No insulation unit
								D	Gylon gaskets, Durobest insulation unit
								Z	ThermA-Pur gaskets, ZrO_2 insulation unit

M&C TechGroup Germany GmbH • Rehhecke 79 • 40885 Ratingen • Germany
info@mc-techgroup.com • www.mc-techgroup.com • P. +49 2102 . 935 - 0
Technical specifications and illustrations are without obligation, subject to modifications. 12.25 - 1.00.03

Options

In-situ Laser Analyzer	ILA1-B000-EX
ILA HMI DCU10 EX	HMI to operate, configure or perform diagnostics on the ILA1-B000-EX In-situ Laser Analyzer. - LCD display: 128 x 64 pixel - Analog outputs: 4 x 4-20 mA, programmable, active - Analog inputs: 2 x 4-20 mA, programmable, active/passive - Relay outputs: 2 x relay outputs programmable: 60 V AC/60 V DC, max. 120 mA, NO (normally open) - Relay inputs: 2 x relay inputs programmable: min. 16 V DC, max. 60 V DC, NO (normally open) - Digital interfaces: CAN (connection to sensor head)
SU EL10	Supply unit with 24 V DC including: 2 x cable glands (5-14 mm) for connecting laser head and HMI, 5 x cable glands (4-11 mm) for power supply, analog signals and status signals; interfaces: RJ45 for Modbus TCP/IP; operating elements: mains switch and maintenance switch; protection class: IP65
SU EP10	Supply unit incl. 24 V DC power supply unit with 50 W for supply voltage 100-240 V AC including: 2 x cable glands (5-14 mm) for connecting laser head and HMI, 5 x cable glands (4-11 mm) for power supply, analog signals and status signals; interfaces: RJ45 for Modbus TCP/IP; operating elements: mains switch and maintenance switch; protection class: IP65
SU EP10 EX	EX supply unit incl. 24 V DC power supply unit with 50 W for supply voltage 100-240 V AC including: 2 x cable glands (5-14 mm) for connecting laser head and HMI, 5 x cable glands (4-11 mm) for power supply, analog signals and status signals; interfaces: RJ45 for Modbus TCP/IP; operating elements: mains switch and maintenance switch; protection class: IP65
SU G10	Supply unit for purge gas including: 1 x purge gas IN (pressure: 3-8 bar g) for nitrogen (N_2) or compressed air (dry, free of dust and grease), **Note:** The purge gas requirements of the specific laser analyzer must be taken into account. 1 x gas path with flow meter to purge measuring section (gas flow: 0-13 Nl/min), 1 x gas path with pressure regulator (0-0.7 bar g) for pressurized sensor head enclosure (0.1 bar above ambient pressure), 1 x gas path with pressure regulator (0-6.8 bar g) for pressurized buffer zone enclosure (1 bar above process pressure); protection class: IP65
SU G10 EX	EX supply unit for purge gas including: 1 x purge gas IN (pressure: 3-8 bar g) for nitrogen (N_2) or compressed air (dry, free of dust and grease), **Note:** The purge gas requirements of the specific laser analyzer must be taken into account. 1 x gas path with flow meter to purge measuring section (gas flow: 0-13 Nl/min), 1 x gas path with pressure regulator (0-0.7 bar g) for pressurized sensor head enclosure (0.1 bar above ambient pressure), 1 x gas path with pressure regulator (0-6.8 bar g) for pressurized buffer zone enclosure (1 bar above process pressure); protection class: IP65
ILA cable, 10 m, 10 x 2 x 0.25 mm	Pre-assembled ILA cable 10 x 2 x 0.25 mm, length: 10 m, for connecting laser head and electrical supply unit
ILA HMI, cable, 10 m, 12 x 2 x 0.25 mm	Pre-assembled ILA cable, 12 x 2 x 0.25 mm, length: 10 m, for connecting HMI and electrical supply unit
EX ILA power supply	ILA power supply TR TSPC050-124 24VDC EX
ILA cellular VPN router RO1520-4L	The cellular router enables remote access to the ILA laser analyzer. A SIM card for operating the router must be provided by the customer.
PS KE10-80R EX	EX piezoresistive pressure transmitter, 0-10 bar abs., pressure connection: G 1/2", complete temp. range: -10 to +80 °C [-40 to 1112 °F]
PS KE10-80R	Piezoresistive pressure transmitter, 0-10 bar abs., pressure connection: G 1/2", complete temp.range: -10 to +80 °C [-40 to 1112 °F]
TS JU600-400A EX	EX screw-in resistance thermometer with end-to-end protection tube, -40 to +600 °C, connect.: G 1/2" threaded
TS JU600-400A	Screw-in resistance thermometer with end-to-end protection tube, -40 to +600 °C, connection: G 1/2" threaded
Probe extension	Various lengths up to 500 mm available
In-situ filter	Filter to protect the measuring section against high dust concentrations